TECHNICAL MANUAL

PISTON DIAPHRAGM PUMP 409.2...KM / 410.2...KM

TRANSLATION OF THE ORIGINAL TECHNICAL MANUAL! EN

PUMP TYPE

RF/R/MF/M 409.2 - 7,5 KM	C 409.2 - 7,5 KM Pro+	RF/R/MF/M 410.2 - 38 KM
RF/R/MF/M 409.2 - 10 KM	C 409.2 - 10 KM Pro+	RF/R/MF/M 410.2 - 76 KM
RF/R/MF/M 409.2 - 18 KM	C 409.2 - 18 KM Pro+	RF/R/MF/M 410.2 - 150 KM
RF/R/MF/M 409.2 - 45 KM	C 409.2 - 45 KM Pro+	RF/R/MF/M 410.2 - 310 KM
RF/R/MF/M 409.2 - 95 KM	C 409.2 - 95 KM Pro+	RF/R/MF/M 410.2 - 510 KM
RF/R/MF/M 409.2 - 190 KM	C 409.2 - 190 KM Pro+	RF/R/MF/M 410.2 - 850 KM

NOTE

Record the exact type and serial number here ► can be read off the type plate on the pump.
These data are important in the case of queries or for ordering spare and/or wear parts and must always be stated.

TYPE:

SERIAL NO:

NOTE

Keep the operating manual for future use!

ATTENTION

Subject to technical modifications!

Quality notes

The **sera** quality management and quality assurance system is certified in accordance with DIN EN ISO 9001:2015.
The **sera** product complies with the applicable safety requirements and accident prevention regulations.

About this instructions

Special notes in these instructions are marked with text and danger symbols.

NOTE

Notes or instructions that faciliate work and ensure a safe operation.

ATTENTION

The non-observance of these safety instructions can result in malfunctions or material damages.

WARNING

The non-observance of these safety instructions can lead to material damages and personal injuries.

SI01 Note on the additional instructions „SAFETY INSTRUCTIONS SI01“.

These technical manual is divided into the following main parts:

TRANSPORT & STORAGE	page 6
PRODUCT DESCRIPTION	page 7
TECHNICAL DATA	page 18
ASSEMBLY / INSTALLATION	page 34
OPERATION / EXPLOSION-HAZARDOUS AREAS	page 42
START-UP	page 44
ELECTRICAL CONNECTION	page 45
MAINTENANCE	page 46
FAULT ANALYSIS / CORRECTIVE ACTION	page 57
SHUT-DOWN / DISPOSAL	page 60
CLEARANCE CERTIFICATE	page 61

Depending on the pump type (see order confirmation) the following additional instructions are included:

Diaphragm monitoring	TM06
Control Pro+	TM04
INTERFACE MODULE PROFIBUS Pro+	TM05
INTERFACE MODULE PROFINET Pro+	TM07
Motor ATEX	supplier documentation
AC motor	supplier documentation
Electrical actuator	supplier documentation
Electrical actuator ATEX	supplier documentation
Pneumatic actuator	supplier documentation
Frequency converter	supplier documentation
Special construction	**sera** drawing

TRANSPORT & STORAGE 6
General 6
Storage 6

PRODUCT DESCRIPTION 7
Type key 7
Type plate 8
Notes attached to the product 8
Materials 8
Components ...409.2 KM / ...410.2 KM 9
Components C409.2 KM 10
PUMP DATA 18

TECHNICAL DATA 18
ELECTRICAL DATA 20
NOISE MEASUREMENT 21
VISCOSITY, PUMPED MEDIUM 21
TEMPERATURE DATA 21
AMBIENT CONDITIONS 21
Characteristics 22
Dimensions RF409.2 standard 24
Dimensions ...409.2 options 26
Dimensions C409.2 standard 28
Dimensions C409.2 options 30
Dimensions RF410.2 standard 32
Dimensions ...410.2 options 34

ASSEMBLY / INSTALLATION 36

OPERATION / EXPLOSION-HAZARDOUS AREAS 42
Operation in Ex-zone C409.2 42
Operation in Ex-zone R409.2 / R410.2 42

START-UP 44

ELECTRICAL CONNECTIONS 45

MAINTENANCE 46
Drive motor 46
Oil change 47
Overview of the tightening torques 47
Changing the Diaphragm 48
Setting the hydraulic compensating valve 52
When recommissioning please proceed as follows: 54
Spare and wearing parts 55

FAULT ANALYSIS / CORRECTIVE ACTION 58
Shut-down 60
Disposal 60

SHUT-DOWN / DISPOSAL 60

TRANSPORT & STORAGE

WARNING

Observe and follow the safety instructions by all means.
See the additional instructions „SAFETY INSTRUCTIONS".
Man, machine and environment are endangered if the safety instructions are not observed.

SI01

General

sera products are checked for perfect condition and function previous to shipment.
Check for transport damage immediately after arrival of goods. If damage is found, this is to be reported immediately to the responsible carrier and the manufacturer.

Storage

An undamaged packaging protects the unit during storage and should only be opened when the product is installed.
Proper storage increases the service life of the product and includes prevention of negative influences such as heat, moisture, dust, chemicals etc.

The following storage specifications are to be obsered:

- Storage place: cool, dry, dustfree and slightly ventilated
- Storage temperature and relative air humidity see Chapter „TECHNICAL DATA".
- The maximum storage time for the standard packaging is 12 months.

If these values are exceeded, metal products should be sealed in foil and protected from condensation water with a suitable desiccant.

Do not store solvents, fuels, lubricants, chemicals, acids, disinfectants and similar in the storage room.

Type key

1 – Type of drive (combinations possible)

- C controllable
- M not mechanically adjustable
- R mechanically adjustable
- F Motor suitable for frequency converter operation
- i Frequency converter, mounted on the motor
- K Stroke mechanism with side drive shaft and connected to the drive via a clutch
- Z twin design
- X Stroke mechanism with two opposite pump heads, combined suction and pressure side
- Y Stroke mechanism with two opposite pump heads

2 – Series

- 204 (solenoid driven pumps)
- 409 (motor driven pumps)
- 410 (motor driven pumps)
- 509 (motor driven pumps)

3 – Revision index

4 – max. Nominal capacity (litre/hour (each pump head))

5 – Displacer (type of construction)

- e Single diap hragm
- ML Multy-layer diaphragm
- KM Piston daphragm
- K Piston

6 – Type of control

- Pro+

1	2		3		4	5	6	
C	409	.	2	-	45	KM	Pro+	*(example)*

Type plate

Each **sera** pump is factory provided with a type plate. The following information can be found on this type plate.

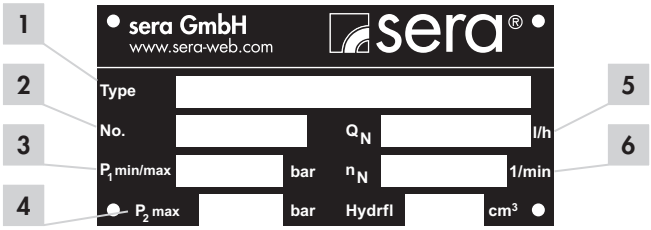

No.	Designation
1	Pump type
2	Serial number of the pump
3	Minimum/maximum permissible pressure in the pump inlet Minimum/maximum permissible pressure in the inlet cross section which the pump can be used for. Please consider that pressure depends on rotation speed, delivery rate, temperature and static pressure at the inlet.
4	Maximum permissible pressure in the pump outlet Maximum permissible pressure in the outlet cross section which the pump can be used for. Please consider that pressure depends on rotation speed, delivery rate, temperature and static pressure at the outlet.
5	Nominal delivery rate Delivery rate which the pump was ordered for, based on the nominal rotation speed nN, the nominal delivery height p2max. and the delivery medium stated in the supply contract.
6	Nominal stroke frequency

Notes attached to the product

Symbols which are directly attached to the pump, e.g. arrows for direction of rotation or symbols for fluid connections are to be observed and kept in legible condition.

Materials

The materials used are stated in the order confirmation and the product description.

sera dosing pumps are run-dry safe oscillating displacement pumps that are characterised by high tightness of the dosing head. The fluid is conveyed by a deformable multi-layer diaphragm.

Components ...409.2 KM / ...410.2 KM

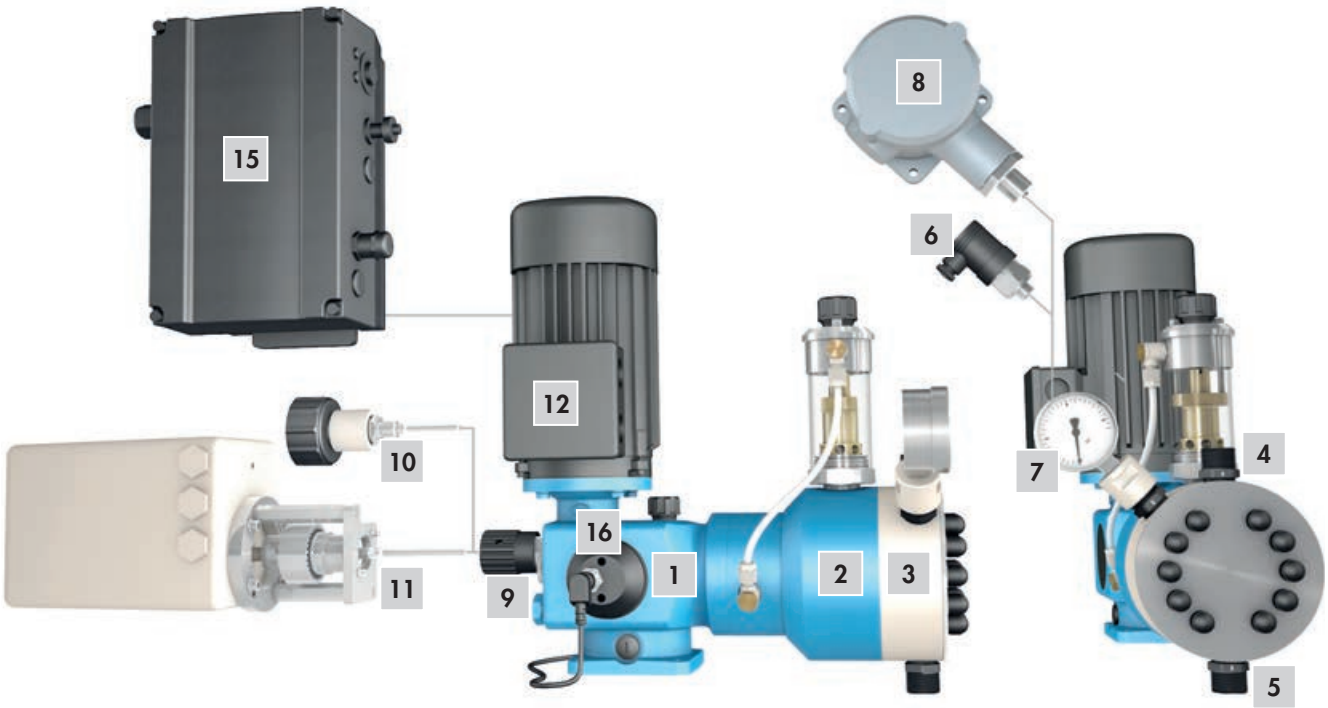

No.	Designation	Remark
1	Stroke mechanism	
2	Assembly pump	
3	Pump body	
4	Pressure valve	
5	Suction valve	
6	Diaphragm rupture monitoring by pressure switch	option
7	Diaphragm rupture monitoring by manometer	
8	Diaphragm rupture monitoring by pressure switch (Ex-Area)	option
9	Manual stroke length adjustment	
10	Manual stroke length adjustment with position indicator	option
11	Stroke length adjustment with actuator	option
12	Motor	
15	Frequency converter *	option
16	Stroke frequency transmitter	option
not illustrated	Blind plug	option (M-design)
not illustrated	Motor for Ex-area *	option (R-design)
not illustrated	Actuator for Ex-area *	option
not illustrated	Pneumatic actuator *	option

* see enclosed documentation

Components C409.2 KM

No.	Designation	Remark
1	Stroke mechanism	
2	Assembly pump	
3	Pump body	
4	Pressure valve	
5	Suction valve	
6	Diaphragm rupture monitoring by pressure switch	
9	Manual stroke length adjustment	
10	Manual stroke length adjustment with position indicator	option
11	Stroke length adjustment with actuator	option
12	Motor	
13	Control Pro+ with removable control element	
14	INTERFACE MODULE	accessories
not illustrated	Suction lances connection	accessories
not illustrated	Blind plug (M-design)	option

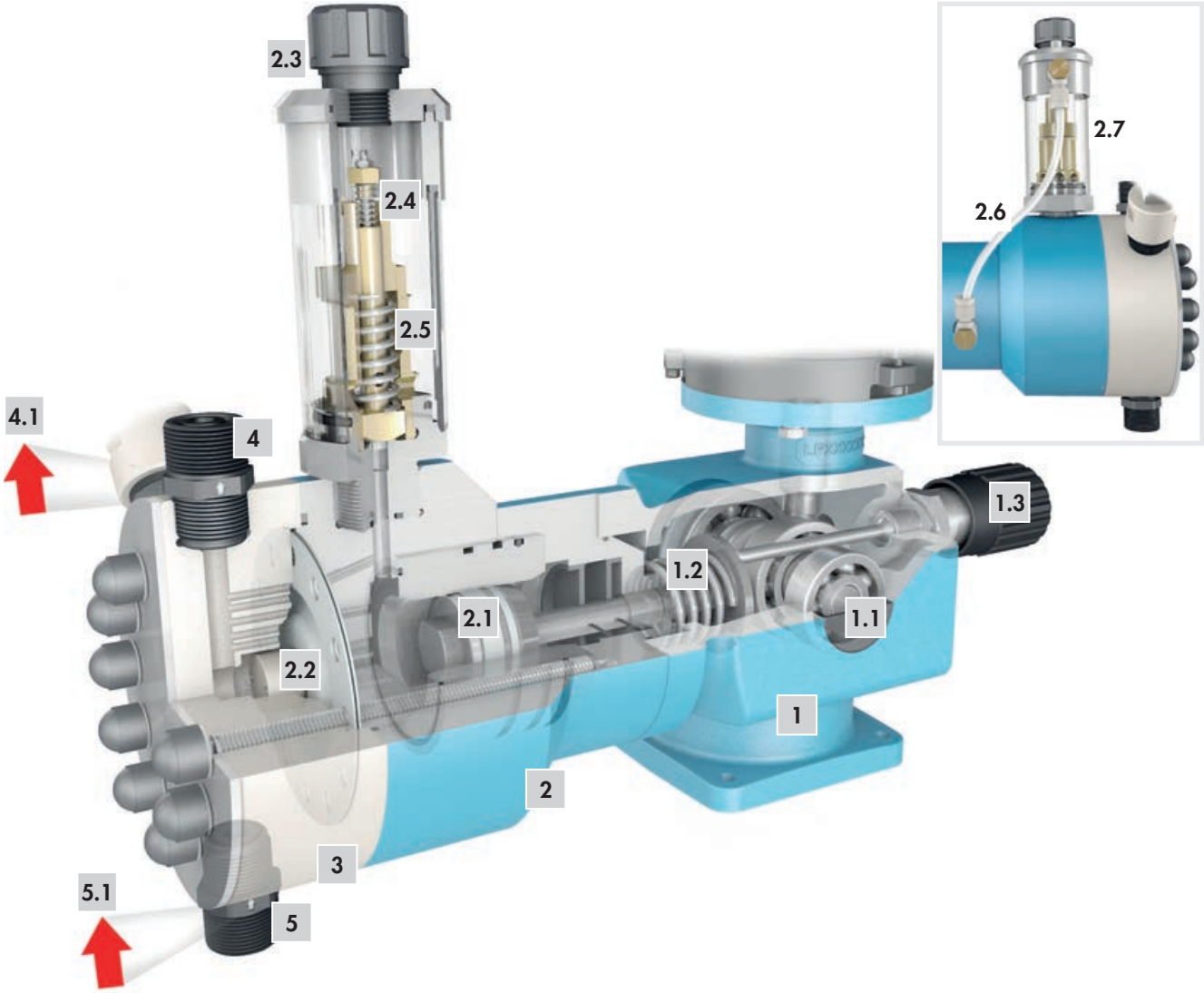

Stroke mechanism (1)

Piston diaphragm pumps of this type series use a rotary cam drive to transmit the rotation of the drive motor to the displacement body.
In case of the rotary cam drive, the eccentric (**1.1**) provides the pressure stroke while the suction stroke is performed by a pressure spring (return spring) (**1.2**).
The effective stroke length can be changed by means of an adjustable scale knob (**1.3**) which prevents the connecting rod from following the rotary cam up to the rear dead centre during suction stroke (see stroke length adjustment).

Assembly pump (2)

The stroke movement of the mechanically linked piston (**2.1**) is transferred hydromechanically to the multi-layer diaphragm (**2.2**) and thus to the pumped medium.
The diaphragm consists of three layers. Only the front layer, the socalled working diaphragm, comes into direct contact with the dosing medium. The middle layer functions as a signalling diaphragm. In case of a rupture of the working diaphragm, the medium is fed to the diaphragm rupture signalling in a controlled manner. The diaphragm rupture can be analysed either electrically or visually (local). The third membrane functions as protection diaphragm (with notch) and ensures that no dosing medium will leak out, even not if the working diaphragm has ruptured. A diaphragm rupture is indicated either by a manometer (RF-,MF409.2, RF-,MF410.2) (visual) or, by a pressure switch (electrical).
The multi-layer diaphragm touches the spherical cap of pump body (**3**) when the pressure stroke finishes in the front dead centre.
The hydraulic compensating valve (**2.3**) ensures an optimum quantity of hydraulic fluid between diaphragm and piston.
The so-called blow valve (**2.4**) and the hydraulic discharge valve (**2.5**) are the most important components of the compensating valve. Both valves are spring-loaded and can be adjusted according to the operating conditions (see Chapter „Setting the hydraulic compensating valve").
Minimum quantities of fluid may leak on the piston which are compensated for by the adjustable blow valve at each suction stroke. The leaking fluids are returned to the store tank (**2.7**) via a return pipe (**2.6**).

NOTE

During the operation the pump`s hydraulic fluid may change the color. This will not affect the life time respectively the safety of the pump.

Thus, the system is closed and no more hydraulic fluid may leak out; during normal operation there is no need to replenish hydraulic fluid.
The blow valve always sucks in a greater quantity of hydraulic fluid than is leaking out at the piston during each suction stroke. The excess quantity is returned into the store tank via the hydraulic discharge valve at the end of a pressure stroke when the diaphragm touches the calotte.
If a stop valve is closed in the pressure pipe during operation of the pump, the complete stroke volume of hydraulic fluid is returned into the store tank to protect the pump from overload.

ATTENTION

The hydraulic discharge valve protect the pump, not the system!

If the pressure in the pressure pipe falls below the set pressure of the hydraulic discharge valve, the blow valve sucks in hydraulic fluid until the optimum volume has been reached.
This process can take up to several minutes, depending on the operating conditions.
The open system of the hydraulic discharge valve starts at the set pressure.
With a blocked pressure line can the piston diaphragm pump generate the counterpressure, which can lie up to a certain value about the set pressure of the hydraulic discharge valve. The height of the achievable possible counterpressure over the set pressure is dependent on the respective pump design.
Blow- and hydraulic discharge valve are set to the pressure specified in the order confirmation before shipment.

NOTE

The hydraulic discharge valve is not a safety valve according to the pressure equipment directive 2014/68/EU!

Pump body (3)

Depending on the applied backpressure, movements of the plastic pump body in elastic materials are possible.
This does not affect the pumps's service life or operational reliability.

Pressure valve / Suction valve (4/5)

The pump valves are ball valves that only work properly in a vertical position. The condition of the valves has a deciding effect on the operating capability of the pump. Valves must be exchanged as complete units. When replacing the valves it is important to check the flow direction (**4.1/5.1**) .

ATTENTION

Pressure valve above, suction valve below!

Diaphragm rupture monitoring device

NOTE

For more detailed information about the indicators of the diaphragm rupture monitoring, please see the additional instructions TM06.

C409.2 (standard) (6)

sera - pumps of the C409.2 KM series are equipped with a diaphragm rupture monitoring by pressure switch.
In case of a rupture of the working diaphragm, a pressure is generated on the pressure switch. The present signal must be evaluated and further processed in such a way that the pump is switched off instantly.

...409.2 / ...410.2 (standard) (7)

sera pumps of the R(F)/M(F)409.2 / R(F)/M(F)410.2 series are equipped with a diaphragm rupture monitoring by manometer. In case of a rupture of the working diaphragm, the medium under pressure flows through a bore in the pump body to the signalling manometer and causes a pointer deflection.

- Switch off the pump immediately
- Replace the diaphragm

CAUTION

If the pump is operated with a backpressure that is only slightly higher than the permissible minimum pressure of p2=1bar, then the deflection of the pointer on the manometer will also be slight.

During normal operation with intact membrane, the manometer shows 0 bar.

...409.2 / ...410.2 (Option) (6/8)

sera pumps of the R(F)/M(F)409.2 / R(F)/M(F)410.2 series can optionally be equipped with diaphragm rupture monitoring with pressure switch.

Diaphragm rupture monitoring by pressure switch:

In case of a rupture of the working diaphragm, a pressure is generated on the pressure switch. The present signal must be evaluated and further processed in such a way that the pump is switched off instantly.

Diaphragm rupture monitoring by Pressure switch (Ex-Area):

CAUTION

The pressure switch is factory set to a switching pressure of ≤ 1bar. For this reason and in order to guarantee a correct dosing function, the pump should always be operated with a pressure of ≥ 1bar!

Stroke length adjustment

The delivery rate of the pump is set by changing the stroke length. The stroke length is infinitely variable between 0% and 100%.

NOTE

A linear dosing behaviour is achieved with stroke length adjustments between 20% and 100%.

Manual stroke length adjustment (standard) (9)

The effective stroke length of the connecting rod is changed by turning the scale knob.
The stroke length should be adjusted during operation of the pump.
The set stroke length can be read off a scale, e.g. 75%.
With the 20-steps adjustment on the scale knob, the stroke length can be set individually with a tolerance of 0.5%..

A protecting cap can be provided for the protection of the stroke length adjustment against unintentional adjustment.

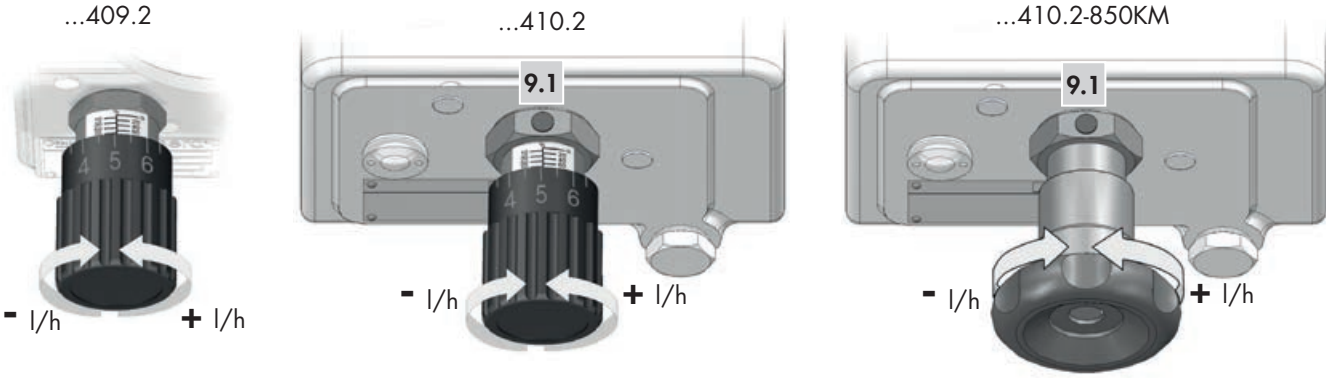

ATTENTION

The locking (**9.1**) is to be released (us-ing a spanner SW3) before the stroke length is changed. Then the locking must be tightened again. This ensures that the set stroke length does not change during opera-tion.

Manual stroke length adjustment by a dial scale with indication of percent (option) (10)

The stroke length is adjusted by turning the hand wheel.
The stroke length shuold be adjusted during operation of the pump.
The set stroke length can be read off the percent scale (the example shows a set stroke length of 65%).
In delivery state, the stroke length adjustment is factory set to 50%.

ATTENTION

The dial scale with indication of percent may become misadjusted during transport.
If the indicator does not match the 50% setting, then the percent scale must be re-adjusted during operation (!) of the pump!

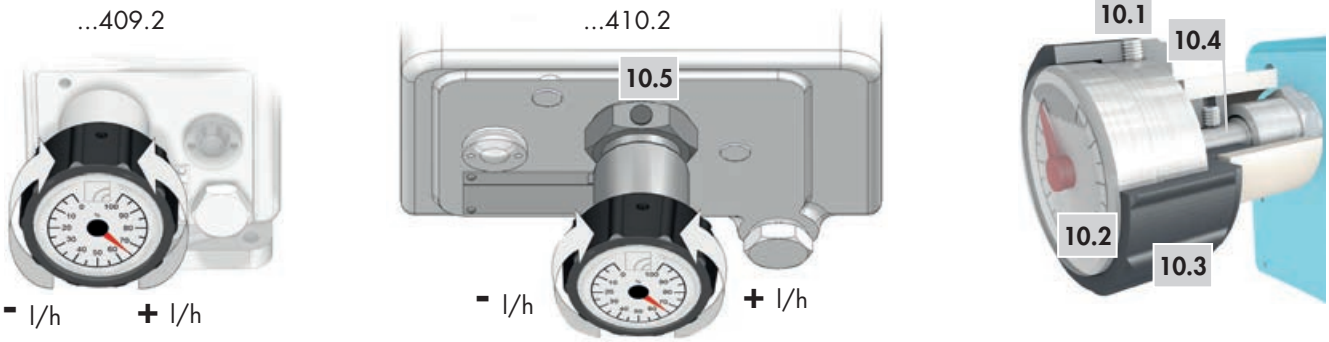

Adjusting the percent scale:

- Switch on the piston diaphragm pump.
- Loosen setscrew (**10.1**).
- Remove percent scale (**10.2**) from the hand wheel (**10.3**).
- Manually turn the percent scale to 0% setting.
- Loosen the locking (**10.5**) ► ...410.2.
- Use the hand wheel to set the stroke length to 0%.
- Turn hand wheel clockwise until there is no further stroke movement (connecting rod does no longer hit the adjusting spindle (**10.4**)).
- Insert percent scale again.
- Use the setscrew to secure the percent scale to the hand wheel.
- Adjust desired stroke length.
- Tighten the locking (**10.5**) ► ...410.2.

Automatic stroke length adjustment by means of an electrical actuator (11)

The electrical actuator is directly mounted to the stroke mechanism (**1**) of the pump. A clutch transmits the rotary motion of the actuator drive shaft to the adjusting spindle. The axial displacement is compensated in the clutch.
In case of dosing pumps with electrical actuator, a manual adjustment of the stroke length on the pump is no longer possible. (Exception: actuator with hand wheel)
The actuator is equipped with two integrated limit switches as well as a position potentiometer for position feedback as standard. Both limit switches are factory set so that the drive will switch off at a stroke length of 0% and 100%, even if a control voltage is applied.
This guarantees that adjustments can only be made within the permissible range. The position potentiometer is driven by a safety clutch which prevents damage caused by incorrectly adjusted limit switches.
Activation is performed by appropriate control units (see **sera** - accessories).
The set stroke length can be read off on the pump (percent scale).
Information on the electrical connection is given inside the cover of the actuator.

⚠ ATTENTION

The adjustment is only possible when the pump is running!

Automatic stroke length adjustment by means of an electrical actuator with integrated positioner

same as Chapter „Automatic stroke length adjustment by means of an electrical actuator“, additionally:
This positioner which is integrated in the actuator enables an actuator setting from 0…100% that is proportional to the connected input signal.
As an option, the actuator can also be provided with a collective interference signal. Information on the electrical connection is given inside the cover of the actuator.

Drive motor C409.2

A **sera** motor pump of series C409.2 is driven by a threephase-motor controlled by the electronics.

A protective motor switch is not necessary due to the fact that a thermic overload protection is integrated in the pump for the protection of the motor.

Drive motor ...409.2 / ...410.2

sera motor pumps R(F)/M(F)409.2 /R(F)/M(F)410.2 are driven either by a three-phase motor.
Standard: three-phase motor (with PTC thermistor; suitable for operation with frequency converter).

Motor connection

In case of a three-phase motor

The motor connection depends on the voltage indication on the type plate and the applied supply voltage.

Example:

Indication on the type plate:	Δ 230V/ Y400V 50Hz
Three-phase power system on sit:	Y400V 50 Hz
Correct motor connection:	Star connection (Y)

Δ Delta connection

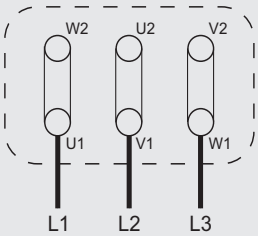

Y Star connection

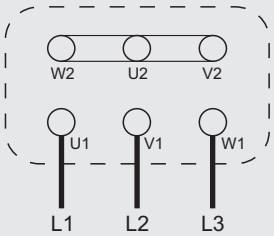

In case of an AC motor

The AC motor has a main and an auxiliary winding. The running capacitor is switched in series to the auxiliary phase.

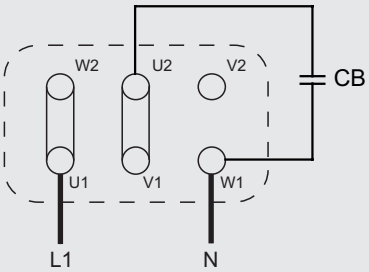

Direction of rotation

The direction of rotation of the drive motor is arbitrary.

Terminal box

Before closing the terminal box, please check that:

- All terminal connections are tightly fitted.
- The interior is clean and free of foreign bodies.
- Unused cable entries are closed and screw plugs are tightened.
- The sealing is correctly inserted in the cover of the terminal box; check proper condition of all sealing surfaces so that the demands of the protection category are fulfilled.

Motor protection

Provide for adequate motor protective equipment in order to protect the motor from overload (e.g. motor protection switch with thermal overcurrent release).
Connect the ground wire to the marked earth screw in accordance with VDE 0100.

ATTENTION

Fuses do not protect the motor!

Conrol Pro+ with removable control element C409.2 (13)

Among other things, the control enable the proportional dosing via analogue signals 4 … 20 mA or contact signals with the possibility of pulse division or pulse multiplication.
The graphical display shows information about the current status of the pump.
A connection for flow monitoring or flow rate measurement and an „empty" signal with pre-alarm and dry run alarm are available as standard.

INTERFACE MODULE (14) (accessories C409.2)

The INTERFACE MODULE provides level input, PROFIBUS connectivity (see TM05) and PROFINET connectivity (see TM07).

Stroke frequency transmitter (16) (option ...409.2 / ...410.2)

sera pumps R(F)/M(F)409.2 / R(F)/M(F)410.2 are oscillating displacement pumps with an exactly defined stroke volume per each pump stroke.
If these dosing pumps should be used for automatic filling processes or charge dosing, then the single pump strokes must be determined and converted into electrical signals.
For this purpose, a stroke frequency transmitter (inductive contactor) is added to the pump (the option cannot mounted additionally) and reports each single pump stroke to the evaluation unit (e.g. preselection counter, SPC-control unit, etc.).

Technical data	
Rated voltage	10 - 60 V DC
Constant current	< 200 mA
Short circuit-proof:	
Connection mode	plug connector with 2 m cable
LED (green)	indicates supply voltage
LED (yellow)	indicates switching status

Wiring diagram

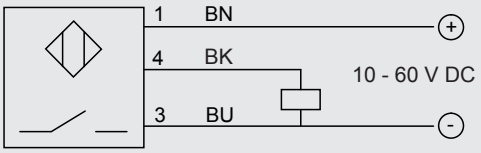

ATTENTION

When switching inductive loads (protectors, relays, etc.), surge protectors (varistors) must be fitted owing to the high self-induction voltage!

ATTENTION

When the pump is deployed in exlosion-hazardous areas a NAMUR type stoke frequency transmitter (II2G EExia IICT6, acc. to. ATEX95) is to be provided!

TECHNICAL DATA

PUMP DATA			RF 409.2-... KM					
			7,5 KM	10 KM	18 KM	45 KM	95 KM	190 KM
Permissible pressure $p_{2max.}$ at the pump outlet	bar	plastic	10	10	10	10	10	10
		stainless stee	80	80	70	35	20	10
Nominal capacity QN at $p_{2max.}$	l/h	50 Hz	0-7,5	0-10	0-18	0-45	0-95	0-190
		60 Hz	0-9,0	0-12	0-21	0-54	0-114	–
Quantity per stroke	ml/stroke	(100%)	1,25	1,1	2,0	5,0	10,6	21,1
Max. suction height	mWC		2	2	2	3	3	3
Min./max. permissible pressure at the pump inlet	bar	$p_{1min/max}$	-0,2/0	-0,2/0	-0,2/0	-0,3/0	-0,3/0	-0,3/0
Recommended nominal diameter DN of the connecting pipes	mm		10	10	10	10	15	15
Nominal stroke frequency	1/min	50 Hz	100	150	150	150	150	150
		60 Hz	120	180	180	180	180	180
Weight approx.	kg	plastic	15	15	15	18	18	18
		stainless stee	17	17	17	21	21	21

Linear dosing range between 20 and 100% stroke length.

PUMP DATA			C 409.2-... KM Pro+					
			7,5KM	10KM	18KM	45KM	95KM	190KM
Permissible pressure $p_{2max.}$ at the pump outlet	bar	plastic	10	10	10	10	10	8
		stainless st.	80	80	50	25	16	8
Nominal capacity QN at $p_{2max.}$	l/h	50/60 Hz	0-7,5	0-10	0-18	0-45	0-95	0-190
Quantity per stroke	ml/stroke	(100%)	1,25	1,1	2,0	5,0	10,6	21,1
Max. suction height	mWC		2	2	2	3	3	3
Min./max. permissible pressure at the pump inlet	bar	$p_{1min/max}$	-0,2/0	-0,2/0	-0,2/0	-0,3/0	-0,3/0	-0,3/0
Recommended nominal diameter DN of the connecting pipes	mm		10	10	10	10	15	15
Nominal stroke frequency	1/min	50/60 Hz	100	150	150	150	150	150
Weight approx.	kg	plastic	17	17	17	20	20	21
		stainless st.	19	19	19	23	23	24

Linear dosing range between 20 and 100% stroke length.

PUMP DATA			RF 410.2-... KM					
			38 KM	76 KM	150 KM	310 KM	510 KM	850 KM
Permissible pressure $p_{2max.}$ at the pump outlet	bar	plastic	10	10	10	10	10 *	8
		stainless ste	80	70	40	20	14 *	8
Nominal capacity QN at $p_{2max.}$	l/h	50 Hz	0-38	0-76	0-150	0-310	0-510	0-850
		60 Hz	0-45	0-90	0-180	0-372	0-610	0-1.020
Quantity per stroke	ml/stroke (100%)		6,5	13	25,8	53,3	87,6	186,4
Max. suction height	mWC		2	2	3	3	3	3
Min./max. permissible pressure at the pump inlet	bar	$p_{1min/max}$	-0,2/0	-0,2/0	-0,3/0	-0,3/0	-0,3/0	-0,3/0
Recommended nominal diameter of the connecting pipes	mm	DN	8	8	15	15	15	20
Nominal stroke frequency	1/min	50 Hz	97	97	97	97	97	76
		60 Hz	116	116	116	116	–	92
Weight approx.	kg	plastic	54	54	54	54	54	64
		stainless ste	60	60	60	60	60	82

* 60 Hz - permissible pressure is 8 bar

TECHNICAL DATA

ELECTRICAL DATA		RF 409.2-... KM
Power consumption	kW	0,37
Voltage	V	230/400V 50Hz, 460V 60Hz
Frequency	Hz	50/60
Insulation class	ISO	F
Enclosure	F	55

ELECTRICAL DATA		C 409.2-... KM Pro+	
		230 V, 50/60 Hz	115 V, 50/60 Hz
Power consumption	kW	0,37	
Voltage	V	210 - 250	100 - 125
Frequency	Hz	50/60	
Inlet voltage, control input	V DC	5...30	
Minimum contact signal time	ms	55	
Analogue input resistance	Ω	39	
Digital output internal/external supply		PNP max. 24V DC, 30mA /max. 30V DC, 30mA	
Recommended fuse	(circuit breaker)	C6A	C10A
Insulation class	ISO	F	
Enclosure	IP	55	

ELECTRICAL DATA		RF 410.2-... KM	
		38 KM ... 76 KM	150 KM ... 850 KM
Power consumption	kW	0,75	1,5
Voltage	V	230/400V 50Hz, 460V 60Hz	
Frequency	Hz	50/60	
Insulation class	ISO	F	
Enclosure	F	55	

NOTE

The motor data can be read off the type plate on the drive motor of the respective pump!

NOISE MEASUREMENT	
Max. sound pressure at max. burden	50 - 65 dB(A)

VISCOSITY, PUMPED MEDIUM	
Max. viscosity with non-spring-loaded valves	100 mPas (=cP)

TEMPERATURE DATA	
Max. liquid temperature	60 °C
Min. liquid temperature	10 °C
Max. operating temperature	40 °C
Min. operating temperature	0 °C
Max. storage temperature	40 °C
Min. storage temperature	0 °C

AMBIENT CONDITIONS	
Max. installation altitude above sea level	1000 m
Max. relative air humidity	< 90%

Characteristics

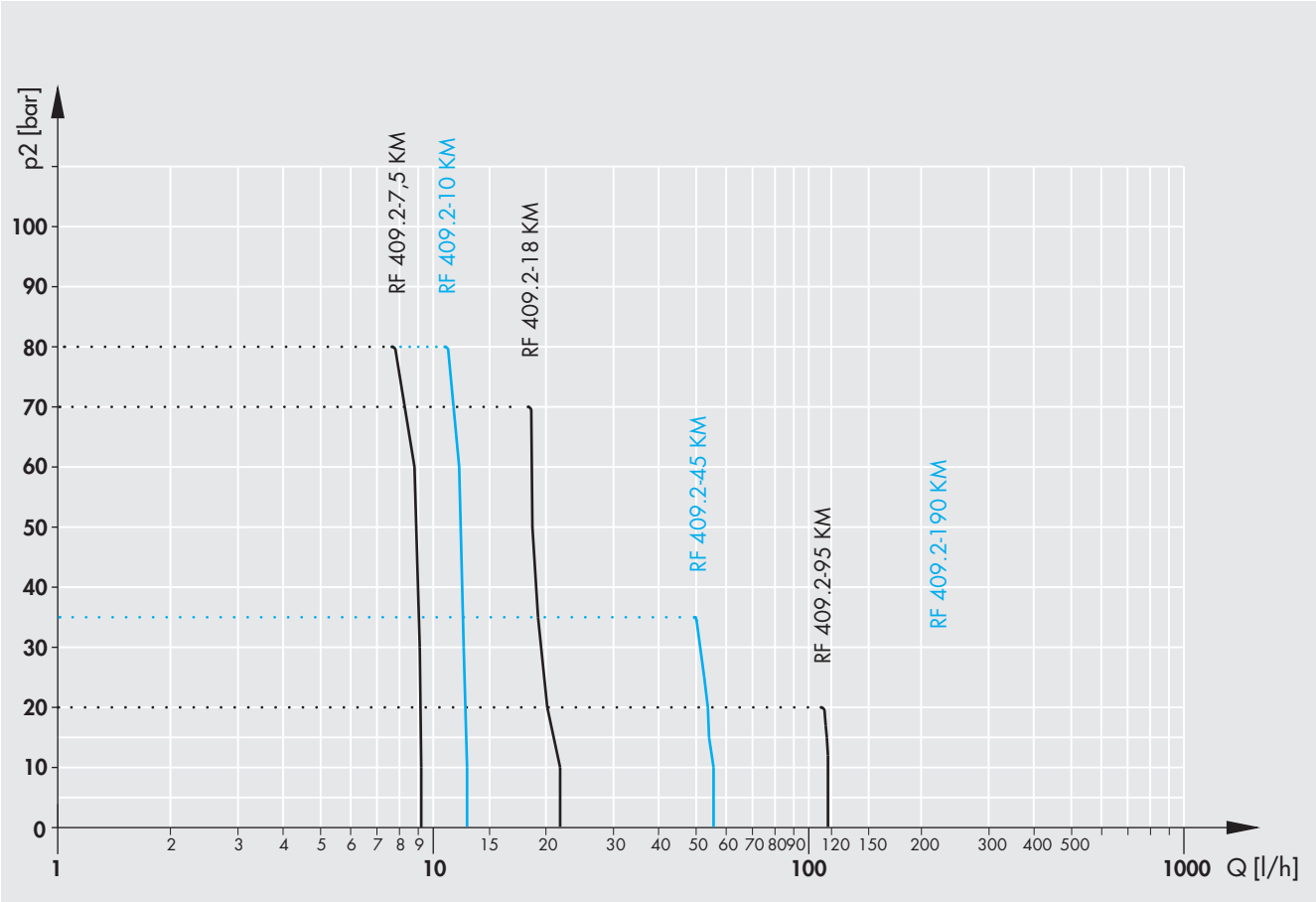

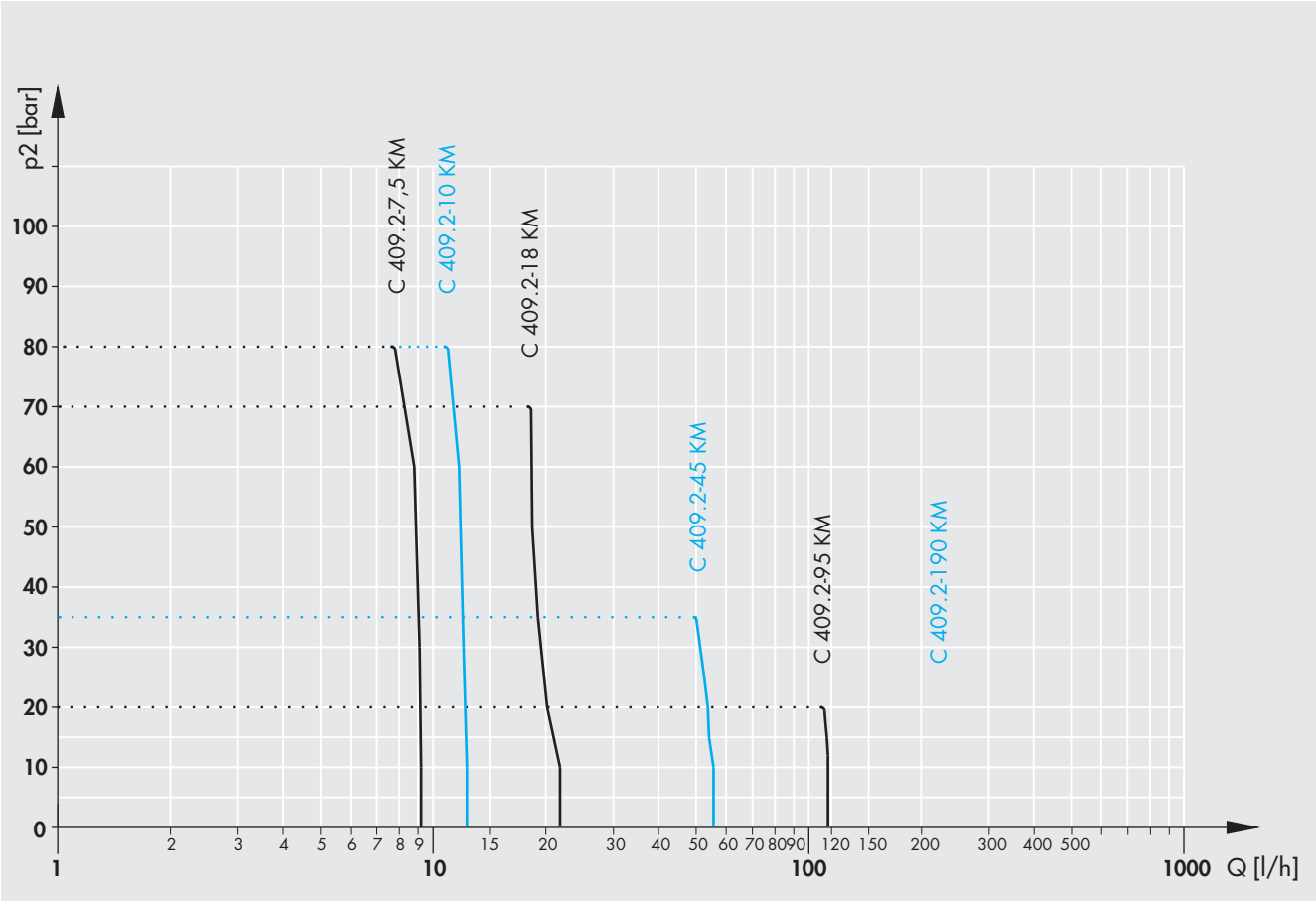

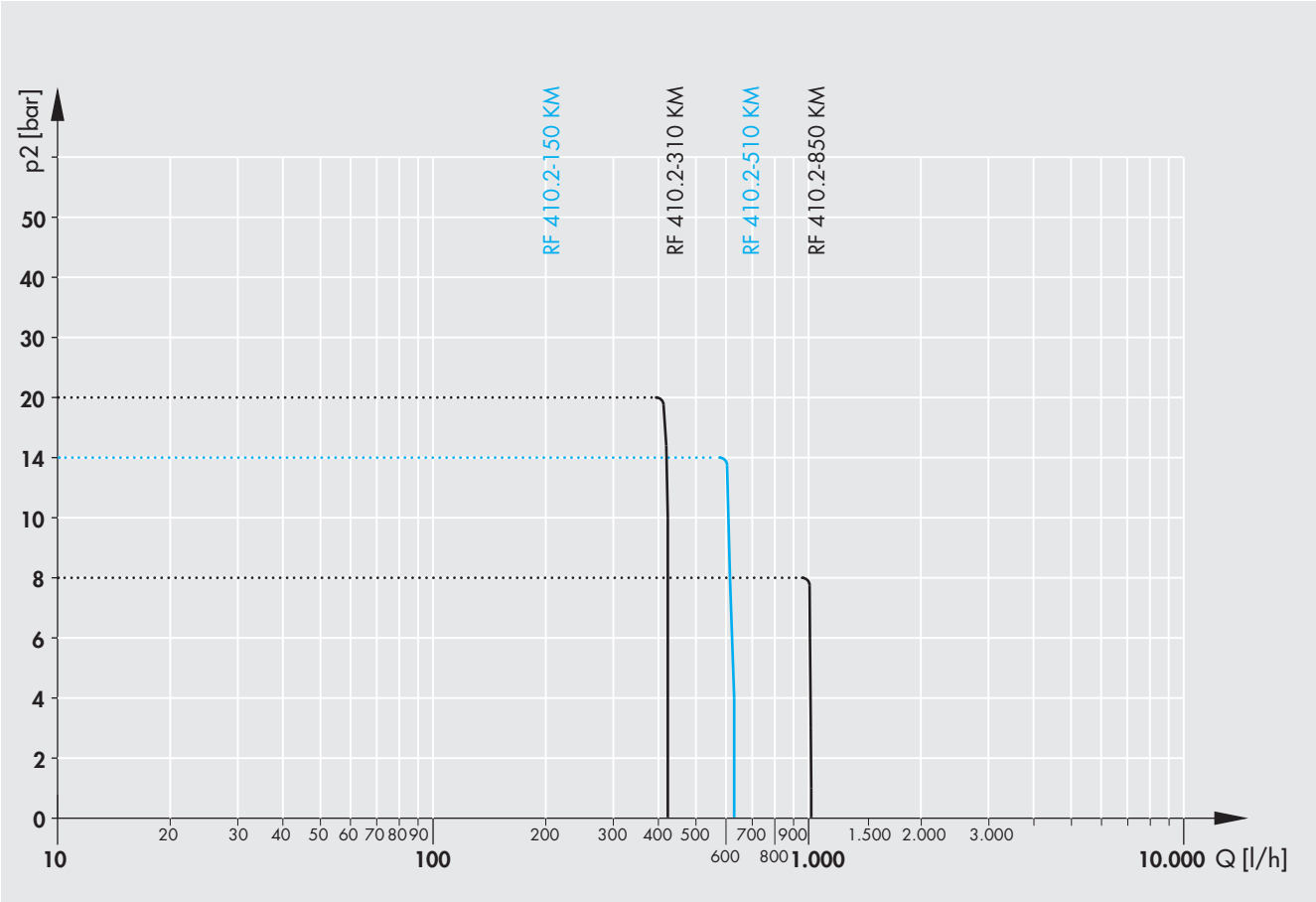
p2 [bar]
50
40
30
20
14
10
8
6
4
2
0
RF 410.2-150 KM
RF 410.2-310 KM
RF 410.2-510 KM
RF 410.2-850 KM
10
20
30
40
50
60
70
80
90
100
200
300
400
500
600
700
800
900
1.000
1.500
2.000
3.000
10.000
Q [l/h]

Dimensions RF409.2 standard

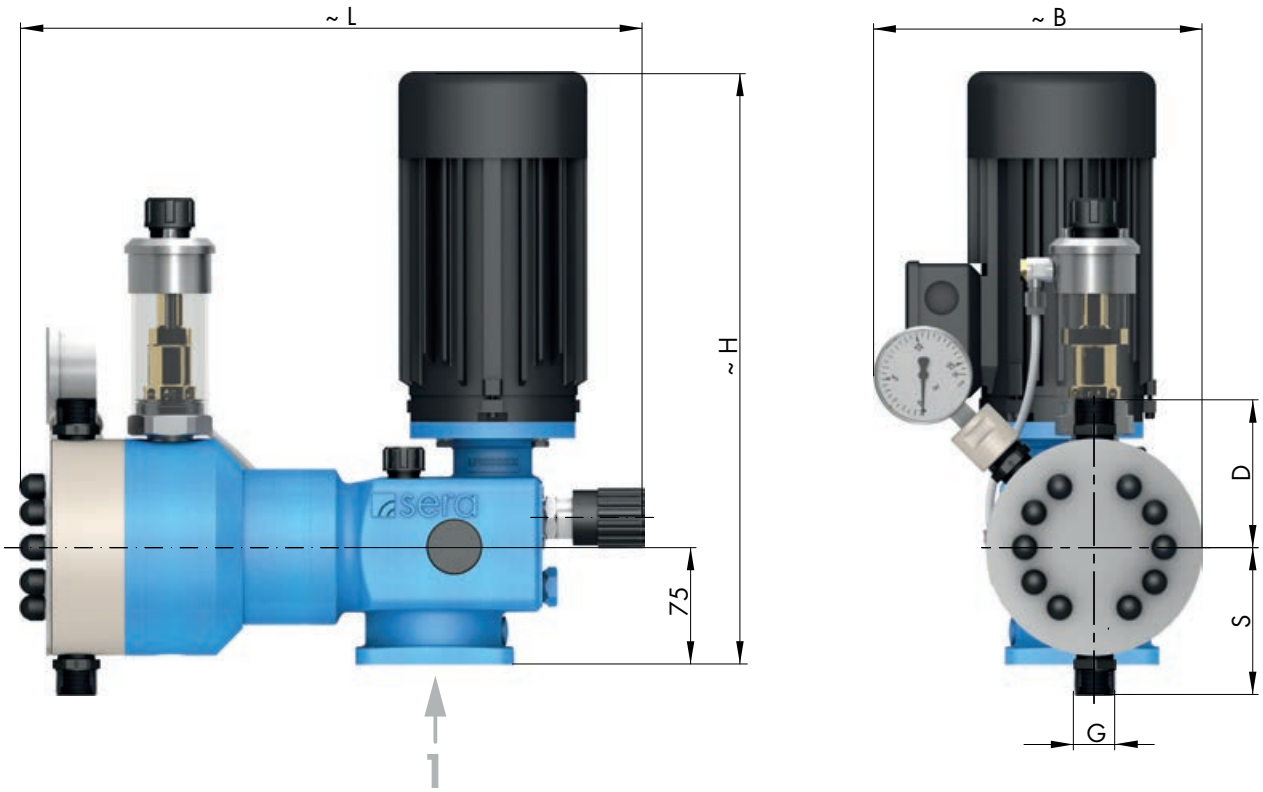

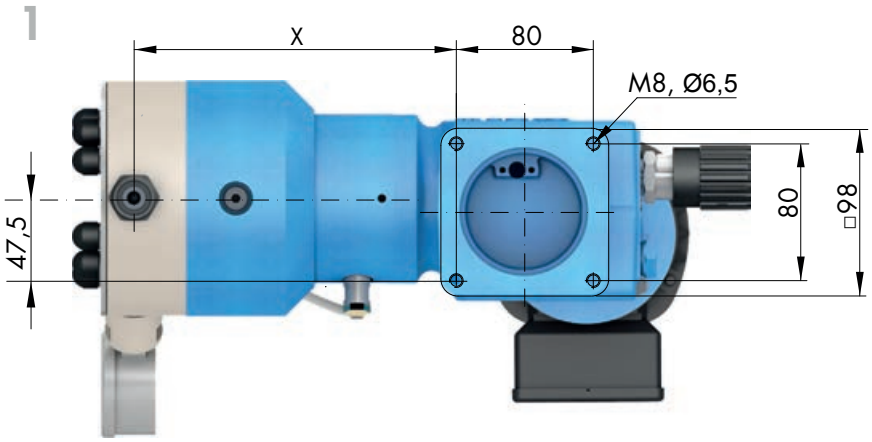

		RF 409.2-...					
SUCTION VALVES		...7,5 KM	...10 KM	...18 KM	...45 KM	...95 KM	...190 KM
DN	Nominal width	8	8	8	8	8	8
G	Connection thread	G¾	G¾	G¾	G¾	G¾	G¾
S	PP-FRP / PVDF-FRP	83	83	83	95	95	95
S	PVC-U	88	88	88	97	97	97
S	1.4571	84	84	84	95	95	95
PRESSURE VALVES							
DN	Nominal width	8	8	8	8	8	8
G	Connection thread	G¾	G¾	G¾	G¾	G¾	G¾
D	PP-FRP / PVDF-FRP	83	83	83	95	95	95
D	PVC-U	88	88	88	104	104	104
D	1.4571	84	84	84	95	95	95
MAX. TOTAL HEIGHT							
H		365	365	365	365	365	365
MAX. TOTAL WIDTH							
B		195	195	195	210	210	210
MAX. TOTAL LENGTH							
L		350	350	350	405	405	405
CONNECTION DIMENSIONS							
X	PP-/PVDF-GFRP, PVC-U	135	135	135	188	188	188
X	1.4571	135	135	135	182	182	182

(Measurements in mm)

Dimensions ...409.2 options

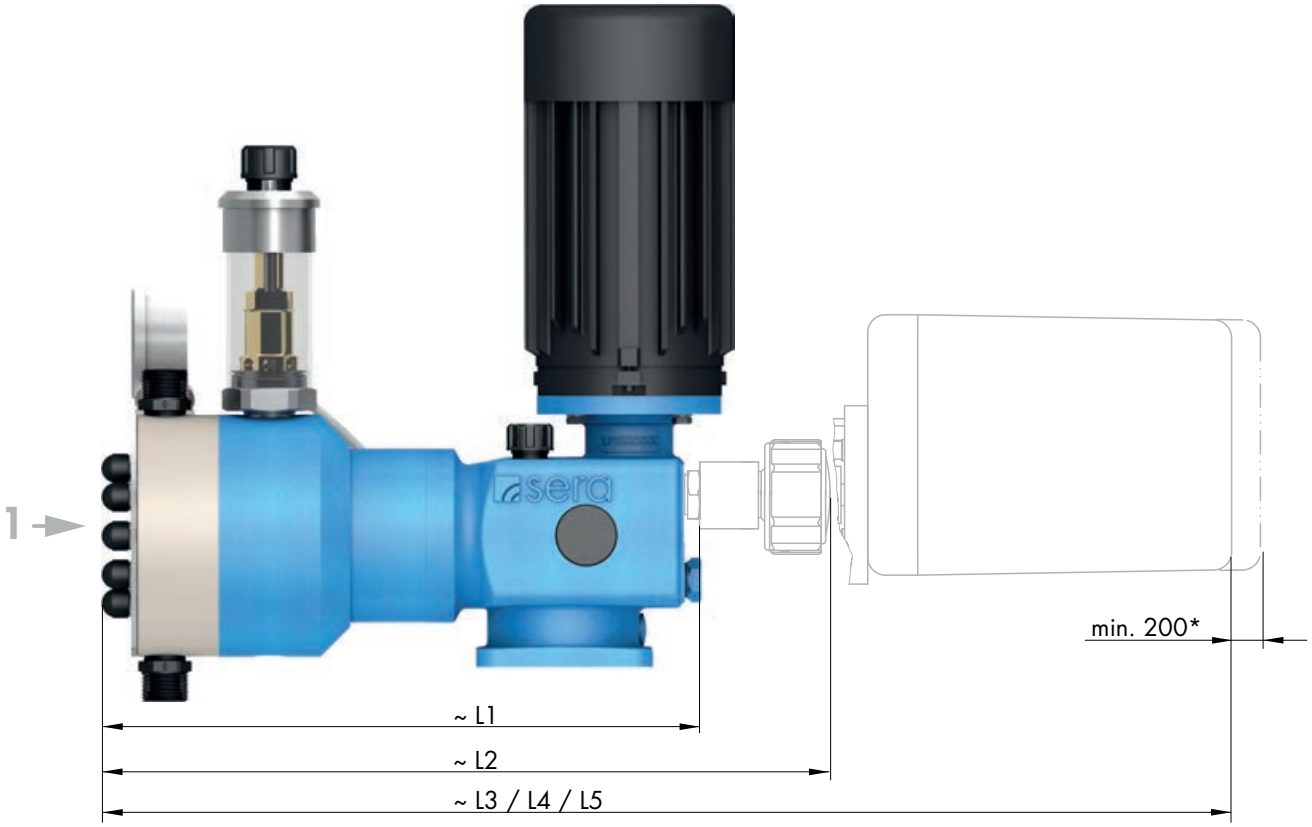

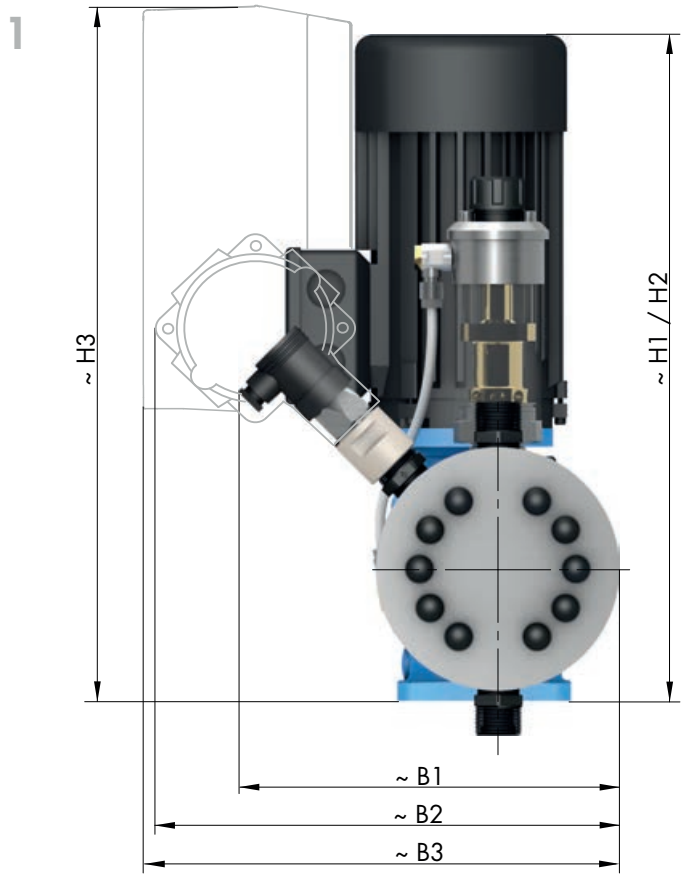

* for removing the actuar cover

OPTIONS		... 409.2-...					
MAX. TOTAL HEIGHT		...7,5 KM	...10 KM	...18 KM	...45 KM	...95 KM	...190 KM
H1	with AC motor	375	375	375	375	375	375
H2	with motor ATEX	335	335	335	335	335	335
H3	with frequency converter	410	410	410	410	410	410
MAX. TOTAL WIDTH							
B1	with by pressure switch	205	205	205	220	220	220
B2	with by pressure switch Ex-execution	280	280	280	300	300	300
B3	with frequency transmittler	270	270	270	290	290	290
MAX. TOTAL LENGTH							
L1	mit blind plug (MF...)	290	290	290	345	345	345
L2	HLV with position indicator	390	390	390	445	445	445
L3	HLV with actuator	520	520	520	575	575	575
L4	HLV with actuator with integrated positione	600	600	600	655	655	655
L5	HLV with actuator ATEX	695	695	695	745	745	745

HLV ► Manual stroke length adjustment

(Measurements in mm)

Dimensions C409.2 standard

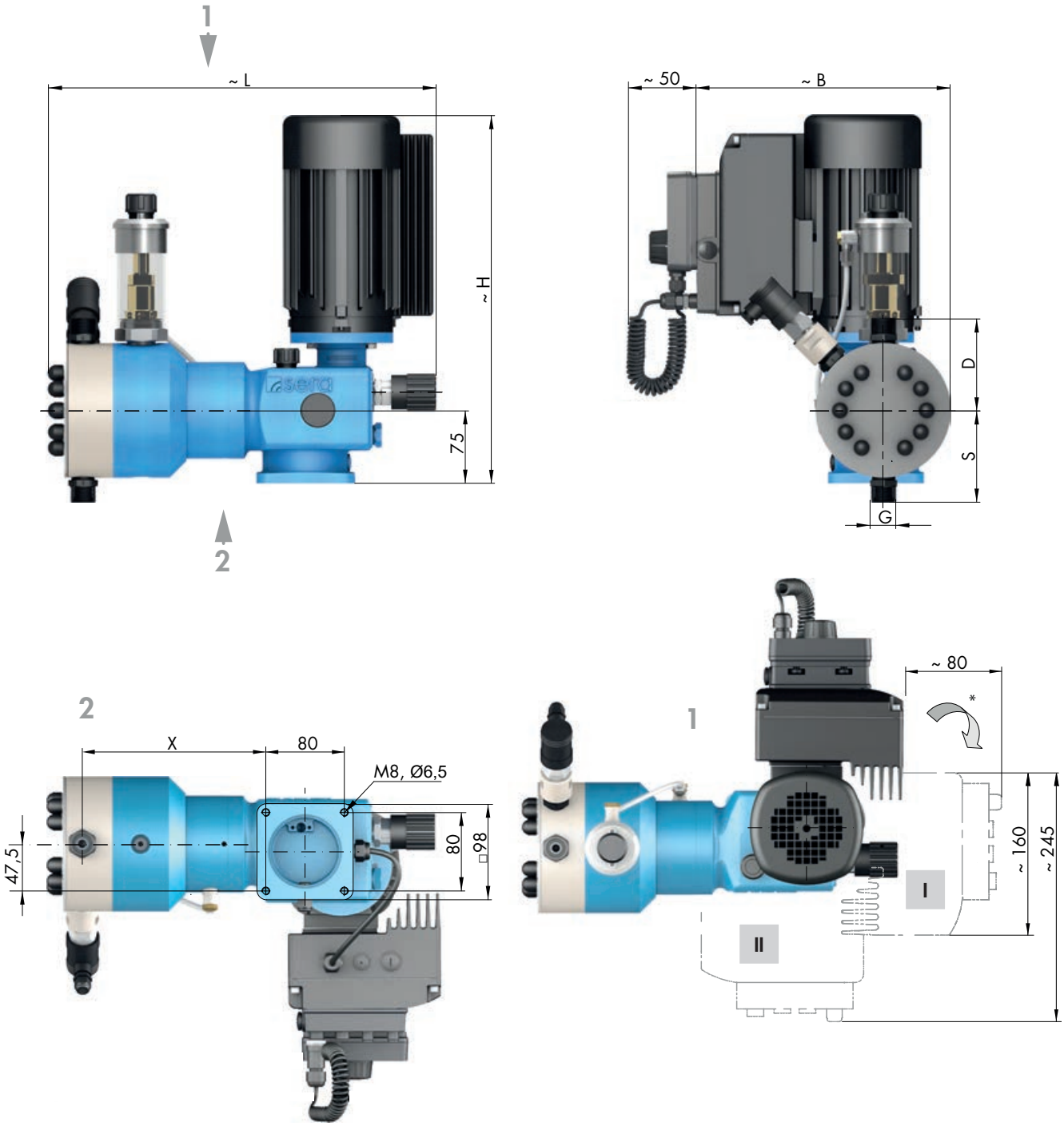

* Drive with electronics can be rotated throughout 90° each and can be put to the positions I and II.
(release the motor fastening screws, put the motor carefully to the desired position and fasten with screws again).

		C 409.2-...					
SUCTION VALVES		...7,5 KM	...10 KM	...18 KM	...45 KM	...95 KM	...190 KM
DN	Nominal width	8	8	8	8	8	8
G	Connection thread	G¾	G¾	G¾	G¾	G¾	G¾
S	PP-FRP / PVDF-FRP	83	83	83	95	95	95
S	PVC-U	88	88	88	97	97	97
S	1.4571	84	84	84	95	95	95
PRESSURE VALVES							
DN	Nominal width	8	8	8	8	8	8
G	Connection thread	G¾	G¾	G¾	G¾	G¾	G¾
D	PP-FRP / PVDF-FRP	83	83	83	95	95	95
D	PVC-U	88	88	88	104	104	104
D	1.4571	84	84	84	95	95	95
MAX. TOTAL HEIGHT							
H		364	364	364	364	364	364
MAX. TOTAL WIDTH							
B		269	269	269	280	280	280
MAX. TOTAL LENGTH							
L		350	350	350	403	403	403
CONNECTION DIMENSIONS							
X	PP-/PVDF-GFRP, PVC-U	135	135	135	188	188	188
X	1.4571	135	135	135	182	182	182

((Measurements in mm)

Dimensions C409.2 options

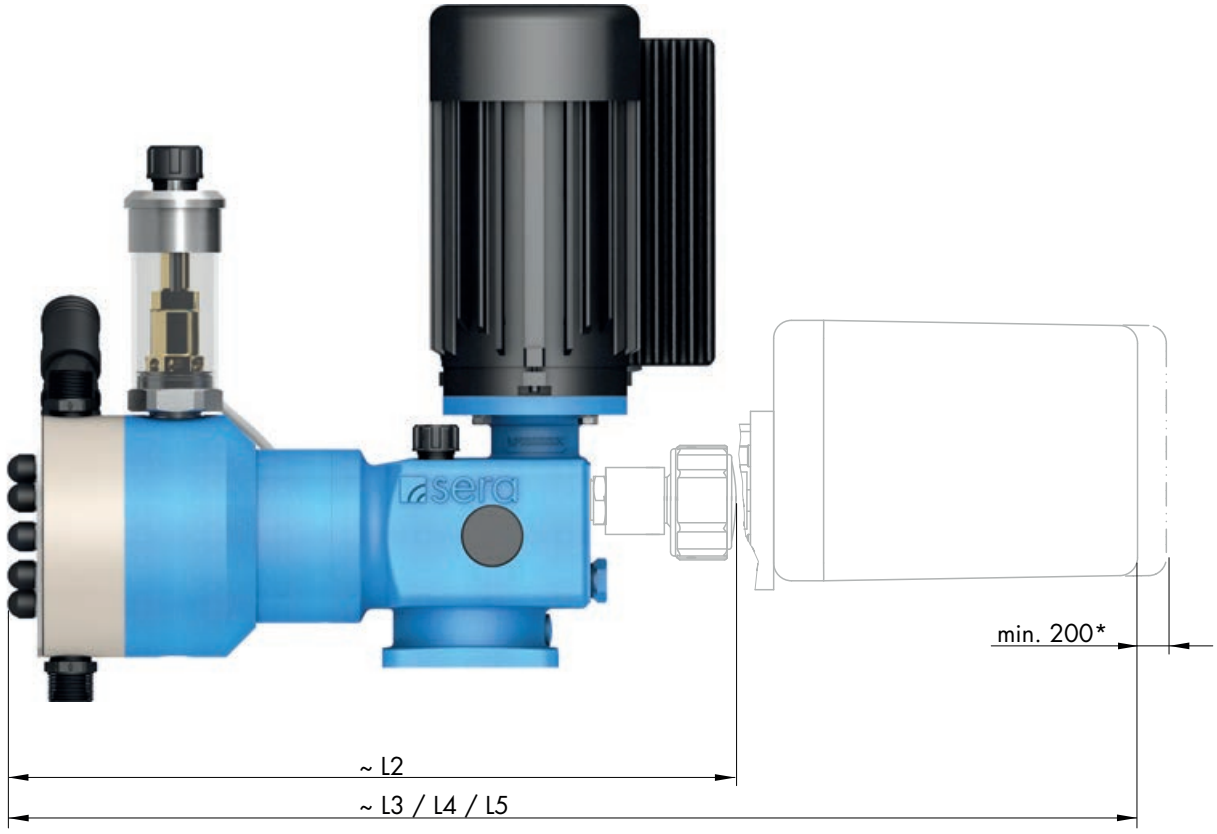

* for removing the actuar cover

OPTIONS		C 409.2-...					
MAX. TOTAL LENGTH		...7,5 KM	...10 KM	...18 KM	...45 KM	...95 KM	...190 KM
L2	HLV with position indicator	390	390	390	445	445	445
L3	HLV with actuator	520	520	520	575	575	575
L4	HLV with actuator with integrated positione	600	600	600	655	655	655

HLV ► Manual stroke length adjustment

(Measurements in mm)

Dimensions RF410.2 standard

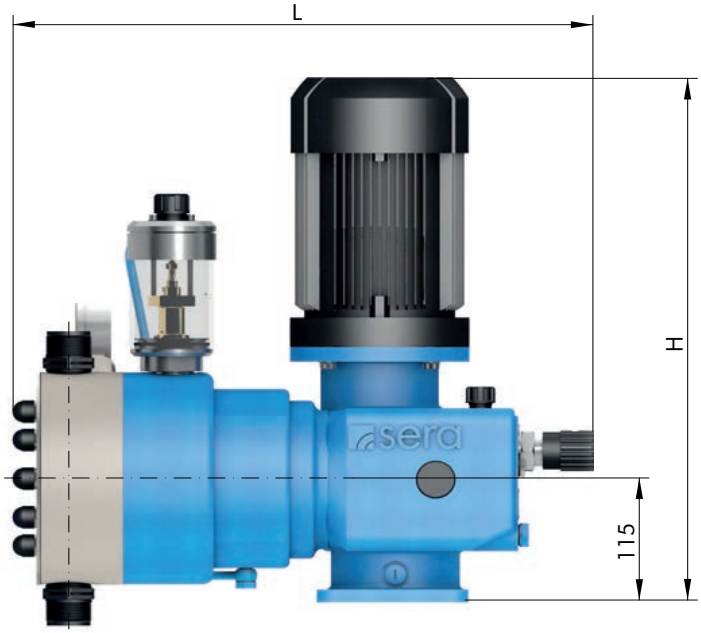

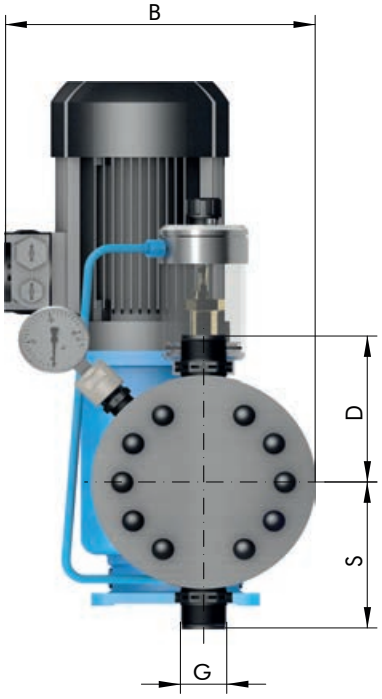

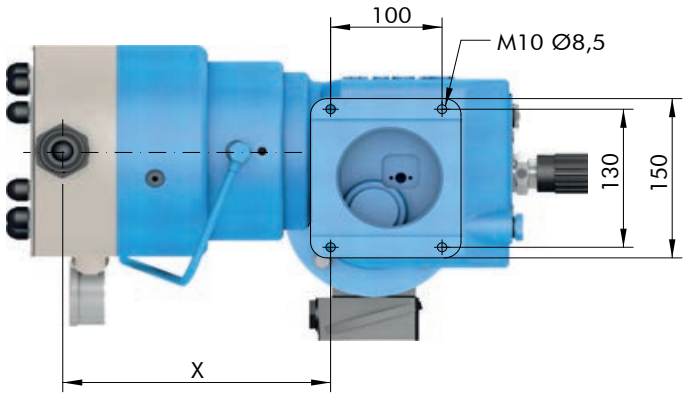

		RF 410.2-...					
SUCTION VALVES		...38 KM	...76 KM	...150 KM	...310 KM	...510 KM	...850 KM
DN	Nominal width	8	8	20 (1)	20 (1)	20 (1)	20
G	Connection thread	G¾	G¾	G1¼ (1)	G1¼ (1)	G1¼ (1)	G1¼
S	PP-FRP / PVDF-FRP	94	94	138	138	138	162
S	PVC-U	97	97	132	132	132	172
S	1.4571	95	95	138	138	138	162
PRESSURE VALVES							
DN	Nominal width	8	8	20 (1)	20 (1)	20 (1)	20
G	Connection thread	G¾	G¾	G1¼ (1)	G1¼ (1)	G1¼ (1)	G1¼
D	PP-FRP / PVDF-FRP	94	94	138	138	138	162
D	PVC-U	104	104	151	151	151	192
D	1.4571	95	95	138	138	138	162
MAX. TOTAL HEIGHT							
H		500	500	535	535	535	535
MAX. TOTAL WIDTH							
B		215	215	245	245	245	269
MAX. TOTAL LENGTH							
L		495	495	533	533	533	580
CONNECTION DIMENSIONS							
X	PP-/PVDF-GFRP, PVC-U	218	218	241,5	241,5	241,5	263
X	1.4571	212	212	225,5	225,5	225,5	247

(Measurements in mm)

Dimensions ...410.2 options

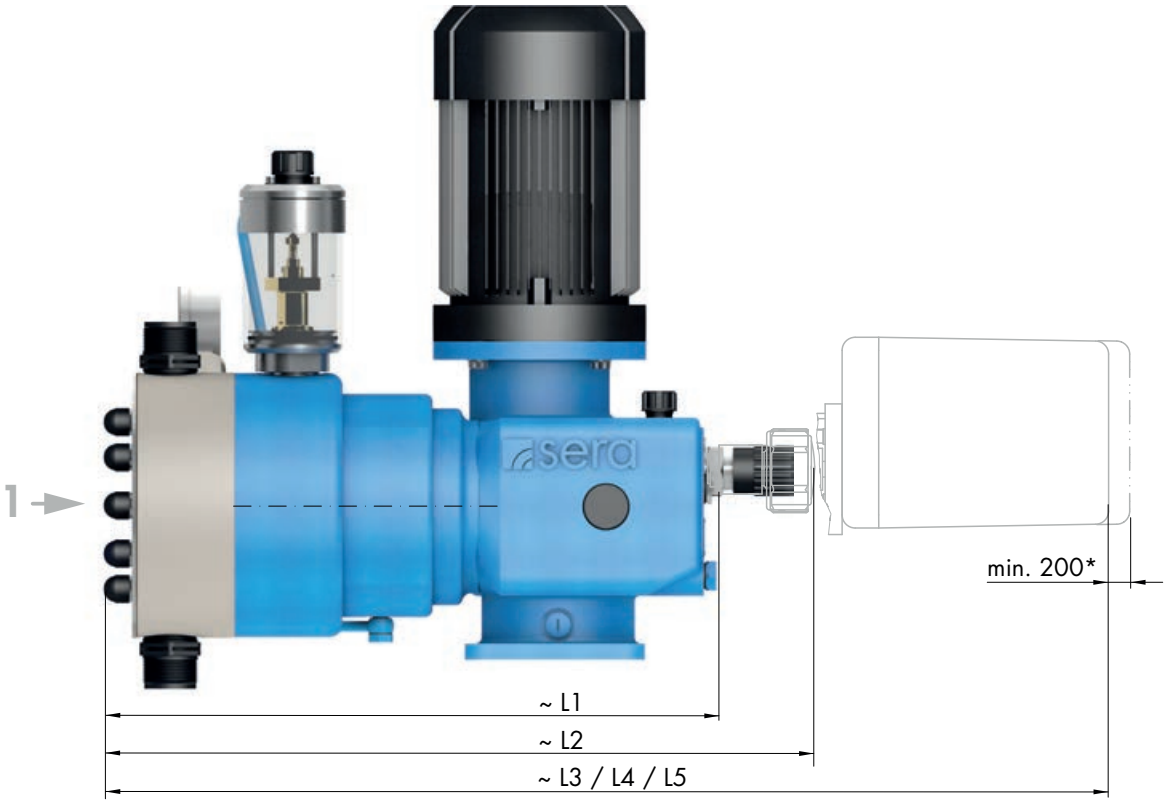

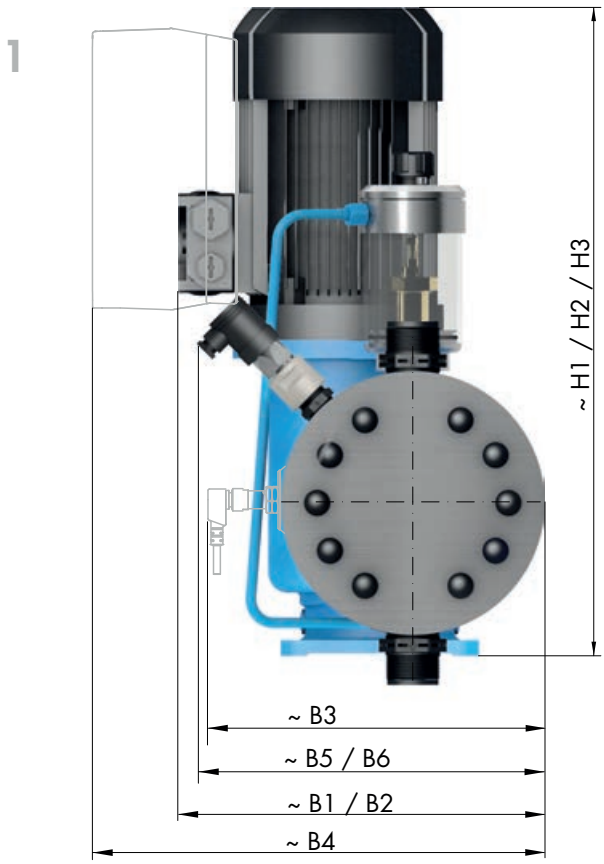

* for removing the actuar cover

OPTIONS		...410.2-...					
MAX. TOTAL HEIGHT		...38 KM	...76 KM	...150 KM	...310 KM	...510 KM	...850 KM
H1	with AC motor	500	500	585	585	585	585
H2	with motor ATEX	450	450	490	490	490	490
H3	with frequency converter	500	500	535	535	535	535
MAX. TOTAL WIDTH							
B1	with AC motor	250	250	285	285	285	210
B2	with motor ATEX	275	275	300	300	300	325
B3	with frequency transmittler	255	255	285	285	285	305
B4	with frequency converter	275	275	400	400	400	400
B5	mit pressure switch	165	165	215	215	215	265
B6	mit pressure switch Ex	230	230	300	300	300	330
MAX. TOTAL LENGTH							
L1	mit blind plug (MF...)	430	430	470	470	470	495
L2	HLV with position indicator	526	526	565	565	565	595
L3	HLV with actuator	680	680	715	715	715	740
L4	HLV with actuator with integrated positione	760	760	795	795	795	820
L5	HLV with actuator ATEX	845	845	885	885	885	910

HLV ► Manual stroke length adjustment

(Measurements in mm)

WARNING

Observe and follow the safety instructions by all means.
See the additional instructions „SAFETY INSTRUCTIONS".
Man, machine and environment are endangered if the safety instructions are not observed.

NOTE

Pump design data for dosing and its temperature can be found in the order confirmation.

NOTE

Operating conditions:
Ambient temperature, relative air humidity and max. installation altitude ► see chapter „Technical data".

- The standard model of the pump is only approved for installation in dry areas in a non-aggressive atmosphere.
- Protect the pump from heat sources, direct sunlight and UV light.
- See "Dimensions" chapter for dimensions of the pump connections and fixing holes.
- Fixing the pump with at least four bolts above the pump base is required for safe operation.
- Install the pump so that there is no vibration and no tension and that it is aligned precisely.
- Install the pump at the optimum possible operating height. Mount the pump so that the valves are vertical.
- Ensure that there is sufficient space around the pump body and the suction and pressure valve so that these parts can be easily dismantled if required.
- Design the nominal diameters of the downstream piping and the valves installed in the system to be the same size or larger than the nominal inlet and outlet diameters of the pump.
- To check the pressure ratios in the piping system, it is recommended to provide connections for pressure measurement fittings (e.g. manometers) near the suction and pressure ports.
- Drain valves must be provided.
- Before connecting the pipes, remove the plastic caps on the suction and pressure ports of the pump.
- Check the fastening bolts for the pump body for tightness and tighten if necessary, see chapter "Overview of the tightening torques".
- Connect pipes to the pump so that there are no forces acting on the pump, such as e.g. misalignment, weight or strain of the pipe.
- Keep the suction pipes as short as possible.
- Use pressure and medium resistant hoses / pipes.
- All pipes and containers connected to the pump must comply with the regulations and must be cleaned, tension-free and intact.
- Display devices must be easily accessible and readable.

In order to avoid cavitation, overload or excessive delivery, the following points should be noted:

- Avoid high suction heights.
- Keep pipes as short as possible.
- Select sufficiently large nominal diameters.
- Avoid unnecessary choke points.
- Install a pulsation damper.
- Install overpressure protection.
- Install a pressure-sustaining valve, if necessary
- Provide feed line for outgassing media.

WARNING

The pump with a control is only designed for operation outside Ex-zonest!

SUCTION SIDE (1)

The following fittings can be used on the suction side:

1.1 Line strainer

1.2 Suction aid
Siphon vessel

1.3 Suction lance

1.4 Multifunction device

1.5 Foot valve

1.6 Shut-off valve

PRESSURE SIDE (2)

The following fittings can be used on the pressure side:

2.1 Vent valve

2.2 Injection fitting

2.3 Dosing valve

2.4 Pulsation damper

2.5 Diaphragm pressure keeping valve

2.6 Diaphragm relief valve

2.7 Multifunction valve

2.8 Flow meter [1]

2.9 Flow monitor [1]

2.10 Shut-off valve

[1] only for pumps with a control

SUCTION SIDE (1)

Line strainer (1.1)

Connect suction line slightly above the bottom of the tank and install a line strainer (0.1 – 0.5 mm mesh size – depending on valve nominal diameter of the pump).

ATTENTION

If impurities are not removed, this results in malfunctions of the pump and the system.

Suction aid / siphon vessel (1.2)

For high tanks without connection on the bottom of the tank ► install suction aid / siphon vessel.
Thereby, pay attention to accelerating pressures which may be generated in a long suction pipe.

Suction lance (1.3)

Install a suction lance for removal of chemicals from tanks and barrels.
The integrated foot valve prevents the backflow of the suctioned medium.
The suction lances are equipped with a level switch for „empty“ signal.

Multifunction device (1.4)

The multifunction device is installed in the suction side piping of the pump and is used for determination of the delivery rate of pumps under real operating conditions.
The device can be filled either using a pending tank volume (communicating container) or using a hand vacuum pump.

Foot valve (1.5)

To prevent running dry of the suction line ► install foot valve (check valve) at the end of the suction line.

PRESSURE SIDE (2)

Vent valve (2.1)

If air can be drawn in due to falling liquid level in the suction tank and at the same time delivered to a pressurised line or against a pressure-sustaining valve ► install vent valve in the pressure line.

NOTE

The delivery flow can be interrupted if there is air in the suction line!

Injection fitting (2.2)

Install an injection fitting that routes into a main line to prevent the backflow of the pumped medium in the dosing line.

WARNING

Unwanted mixing in the dosing line occurs if any possible backflow from the main line is not prevented.

Dosing valve (2.3)

Installation of the dosing valve prevents the liquid from the system to be treated being able to penetrate into the dosing line.

Pulsation damper (2.4)

Damping of the pulsation by installation of pulsation dampers if:

- a low-pulsation delivery flow is desired for process reasons,
- acceleration forces caused by the piping geometry must be removed.

Install pulsation damper as close as possible to the pump head.
If both pulsation damper and pressure-sustaining valve should be integrated, install the pressure-sustaining valve between pump and pulsation damper.

WARNING

Undamped acceleration forces can result in the following faults / damage:

- flow rate fluctuations
- dosing errors
- pressure surges
- valve shocks
- increased wear on the suction and pressure sides of the pump
- mechanical destruction of the pump
- leaks and valve shocks if the permissible maximum pressure on the pump pressure
- side is exceeded
- damage to the piping and its installed fittings

Diaphragm pressure-keeping valve (2.5)

If dosing into a main line with negative pressure ► install pressure-keeping valve in the dosing line.

ATTENTION

It must be ensured during the installation that excess delivery (due to positive pressure difference (≥ > 1 bar) between pressure and suction sides) is avoided.

Diaphragm relief valve (2.6)

If the permissible pressure in the system can be exceeded by closing any shut-off valve or by clogging of the line ► install diaphragm relief valve.

When using an external overflow valve, the following is applicable for the return line:

- Route the return line sloping downward into the storage tank which is under atmospheric pressure or into an open drainage channel.
- Or connect directly to the pump suction line, but only if there is no check valve in the suction line (e.g. foot valve of a suction lance).

ATTENTION

Shut-off valves must not be closed when the pump is running!

WARNING

An overpressure protection device (e.g. relief valve) must generally be provided if the permissible operating pressure can be exceeded.

ATTENTION

If the permissible operating pressure is exceeded and the pump is not equipped with overpressure protection, the pump will be damaged.

WARNING

The pumped medium can spray out if the pump is damaged.

Multifunction valve (2.7)

The multifunction valve provides the following functions:

- pressure-keeping valve function,
- overflow valve function,
- pressure relief function,
- venting.

The multifunction valve is mounted directly on the pump pressure port.

Flow meter (2.8)

For measurement and monitoring of the flow rate ► install flow meter.
The application range is restricted to media that are similar to water.
The flow meter is screwed upright on the pressure port of the pump and connected to the pump electronics via the input for flow monitoring.

Flow monitor (2.9)

To record the flow rate of the pump ► install flow monitor.
The application range is restricted to media that are similar to water.
The flow monitor is screwed upright on the suction port of the pump and connected to the pump electronics via the input for flow monitoring.

Operation in Ex-zone C409.2

WARNING

The pump with a control is only designed for operation outside Ex-zonest!

Operation in Ex-zone R/M409.2 / R/M410.2

WARNING

The prerequisite for the use in explosion-hazardous areas is an appropriate design of the pump.

The product supplied by **sera** meets the requirements of directive 2014/34/EU if it is correspondingly marked. This guarantees safe operation in explosion-hazardous areas.

WARNING

It is the operator's task to define the field of application and to check whether the pump is suited for this application. He/she must clearly define the zone, the device category, the explosion group and the temperature class.

WARNING

Avoid build up electrostatic conditions!

WARNING

To avoid contamination of the valves strainers in the suction line have to be installed!

Identification

The pump has a label stating the zone/device category /explosion group/temperature class in compliance with directive 2014/34/EU.

Ex II2G c IIBT4 bzw.
Ex II2G c IICT4
(note special specifications in the confirmation of order.)

Installation

The intended operating conditions in explosion-hazardous areas according to directive 2014/34/EU are stated in the confirmation of order or the product description. The indicated limit values should not be fallen below or exceeded. Installation regulations given in the operating instructions must be adhered to.

WARNING

Use only suitable tools for performing assembly and maintenance work on machines or plants in explosion-hazardous areas. Directive 99/92/EC must be observed.

Potential equalization

After mounting the pump the proper connection to the site potential equalization is to be ensured. The max. bleed resistor (1MΩ) has to be checked and documented.

Start-up

After installation, the pump must immediately be used for the suction of fluids, i.e. the pump must immediately be started after the tank has been installed and filled.

Operation

The intended operating conditions in explosion-hazardous areas according to directive 2014/34/EU are stated in the confirmation of order or the product description. The indicated limit values should not be fallen below or exceeded. Details about explosion zone, device category, explosion group and temperature class can be seen from the Declaration of Conformity.

Degassing of the pumped medium:

- Never let the pump run dry.
- Check the liquid level in the tank during operation of the pump.
- Make sure that the pump is switched off when the liquid level in the tank falls below the minimum level required (explosive atmosphere may be carried over)..

Vapour bubbles from the pumped medium are harmless as they have no explosive potential.

WARNING

Formation of an explosive gas mixture must be prevented.

Temperature indications

Permissible ambient temperature: -10°C ≤ Ta ≤ +40°C

Maintenance

The maintenance notes listed in Chapter 10 are generally applicable. **Exception:**

ATTENTION

The oil level in the stroke mechanism of the pump must be checked once a week!

Diaphragm monitoring

Basic information about diaphragm monitoring is to be found in the chapter „Diaphragm monitoring“ in the product description.

ATTENTION

In case of a diaphragm rupture, switch off the pump immediately and change the diaphragm. Danger of generation or carry-over of an explosive atmosphere inside the pump.

- If the pump is equipped with an optical diaphragm monitoring (manometer) this must be checked at regular intervals which must be specified according to the customer’s risk assessment (inspections by the operators).

- If the pump is equipped with a diaphragm monitoring with pressure switch (Ex-design) this must be evaluated and displayed in the process control system (control room) (by the customer) in order to enable an immediate detection of a diaphragm rupture.

WARNING

Observe and follow the safety instructions by all means.
See the additional instructions „SAFETY INSTRUCTIONS".
Man, machine and environment are endangered if the safety instructions are not observed.

Adequate fastening at the pump foot and compliance with the operating parameters specified in the technical data are required for the operation of the pump.

Checks before every start-up:

- Check all connections for tightness.
- Tighten fixing bolts of the pump body with the specified tightening torques (see „Overview of the tightening torques" chapter).
- Check of the electrical connections.
- Check of the mains voltage on the rating plate with the local conditions.

Driving motor

Preconditions:

- Make sure that voltage and frequency correspond with the indications on the type plate of the motor. Permissible voltage tolerance (DIN VDE 0530).
- For rated voltage ► + 10 %
- For rated voltage range ► ± 5 %
- The connecting cable must be dimensioned according to the motor characteristics.
- Secure connecting cable with a strain relief.
- The nominal motor power refers to an ambient temperature and an installation site ► see chapter „TECHNICAL DATA" . Motor output will be reduced if these values are exceeded (see VDE 0530).
- Adapted for "moderate" groupe of climates according to IEC 721-2-1.

NOTE

Operating voltage range see chapter „TECHNICAL DATA“.

NOTE

Pump without control:
Motor connection see chapter „Drive motor“ in the PRODUCT DESCRIPTION.

NOTE

Pump with a control:
Electrical iterfaces see the additional operation instructions for the CONTROL.

ATTENTION

Pump with a control:
The pump restarts in the selected operating mode with the specified parameters after switching on again or after restoration of the power supply following a power failure.

WARNING

Observe and follow the safety instructions by all means.
See the additional instructions „SAFETY INSTRUCTIONS".
Man, machine and environment are endangered if the safety instructions are not observed.

Check the following at regular intervals:

- Tight fit of piping.
- Tight fit of pressure and suction valve.
- Proper condition of the electrical connections.
- Tight fit of the screws for fastening the pump body (check this at least every three months).
- For the tightening torques of the mounting screws, please see Chapter „Overview of the tightening torques".
- Additionally with motor pumps: Check oil level regularly (oil eye).

Drive motor

The electric motor should always be kept clean so that neither dust, dirt, oil nor other contaminates may affect the correct operation.

In addition, we recommend to ensure that:

- The motor does not produce strong vibrations
- Suction and blowing openings for the supply of cooling air are not closed or restricted (may lead to unnecessary high temperatures in the windings)

The ball bearings inserted in the motor are lubricated for life.

Oil change

Check oil level at regular intervals (oil sight glass (**1**))

Perform an oil change once a year.
To do so, proceed as follows:

- Unscrew the venting screw (**5**).
- Prepare an appropriate container (**2**).
- Open the screw plug (**3**) and drain off oil.
- Close hole with screw plug (pay attention to the sealing ring (**4**)!).
- Fill oil in threaded hole of the venting screw.
- Screw in venting screw (**5**).

Gear oil			
Pump type	Specification	sera use	Quantity (litres)
...409.2	CLP VG220 DIN51517-3	ARAL Degol BG220	0,3
...410.2	CLP VG220 DIN51517-3	ARAL Degol BG220	1,25

Overview of the tightening torques

Pump body plastic	Pump body 1.4571
15 Nm (25 Nm - ...410.2-850KM)	

Changing the Diaphragm

In order to ensure a correct function of the diaphragm pump and to fulfil the required safety and protective provisions it is absolutely necessary to check and replace the diaphragms at regular intervals.

After 3000 operating hours or at the latest after one year, a service message requiring diaphragm replacement is shown on the graphical display of the pump with a control (see additional instructions of the control). An earlier diaphragm replacement can be necessary depending on the medium and the application area.

WARNING

Pump with a control:
Observe the instructions on the graphical display for the replacement of wear parts!

The multi-layer diaphragm (**1**) is to be exchanged as complete pre-assembled diaphragm.

- Drain off hydraulic fluid by opening the screw plug (**2**) and the vent screw (**3**). Then turn the set screw (**4**) by an additional visual control up to position **A** against the clockwise. To the support press on the blow valve (**5**) using a screwdriver.
- Loosen fixing screws (**6**) on the pump body (**7**). ■
- Remove pump body and front plate (**8**) to the front.

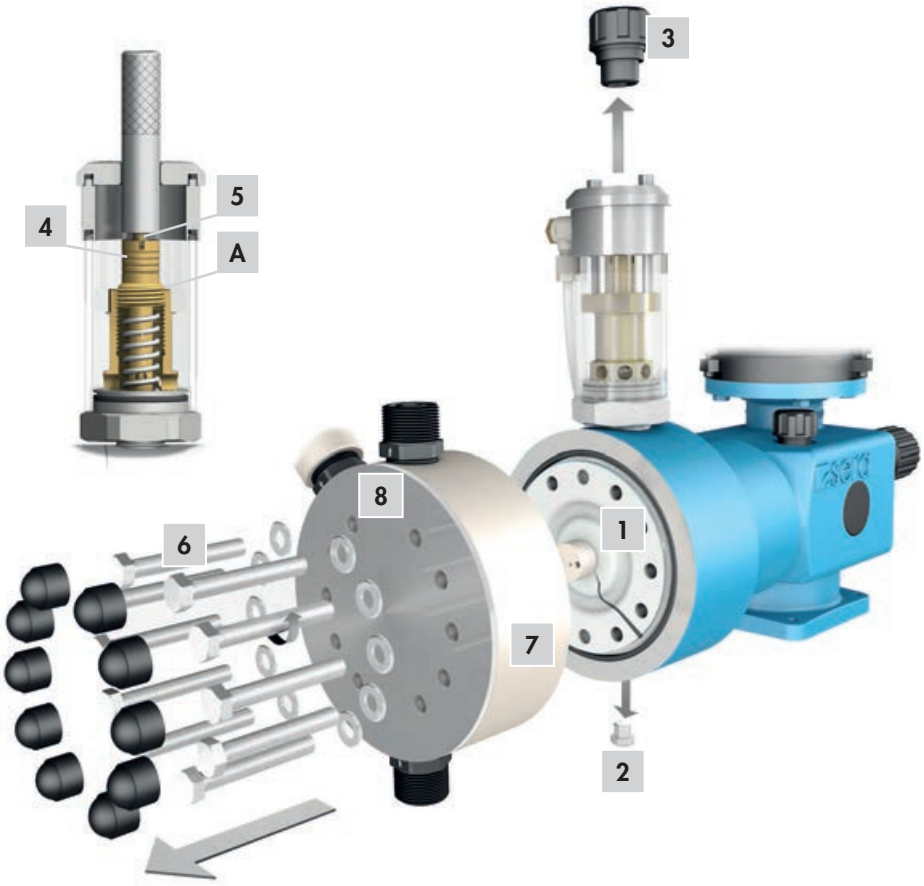

- Remove multi-layer diaphragm set (**1**) out of the cylinder (**9**).
- Check all components of the hydraulic system incl. the hydraulic compensating valve (**10**) for damage and soiling if these have come into contact with the medium in case of a diaphragm rupture.

Assemble the pump in reverse order:

- Insert the new O-Ring (**12**) into the base ring.
- Insert the multi-layer diaphragm (**1**) to the cylinder (**9**) that the notch of protection diaphragm (**13**) is in the direction of the cylinder.
- When assembling the pump body, please note: suction valve (**14**) below, pressure valve (**15**) above!
- Pay attention to tightening torques (see Chapter „Overview of the tightening torques"). Secure the nut crosswise.
- Fill hydraulic fluid (**11**) in store tank (**10**) (type and quantity are indicated in the table).

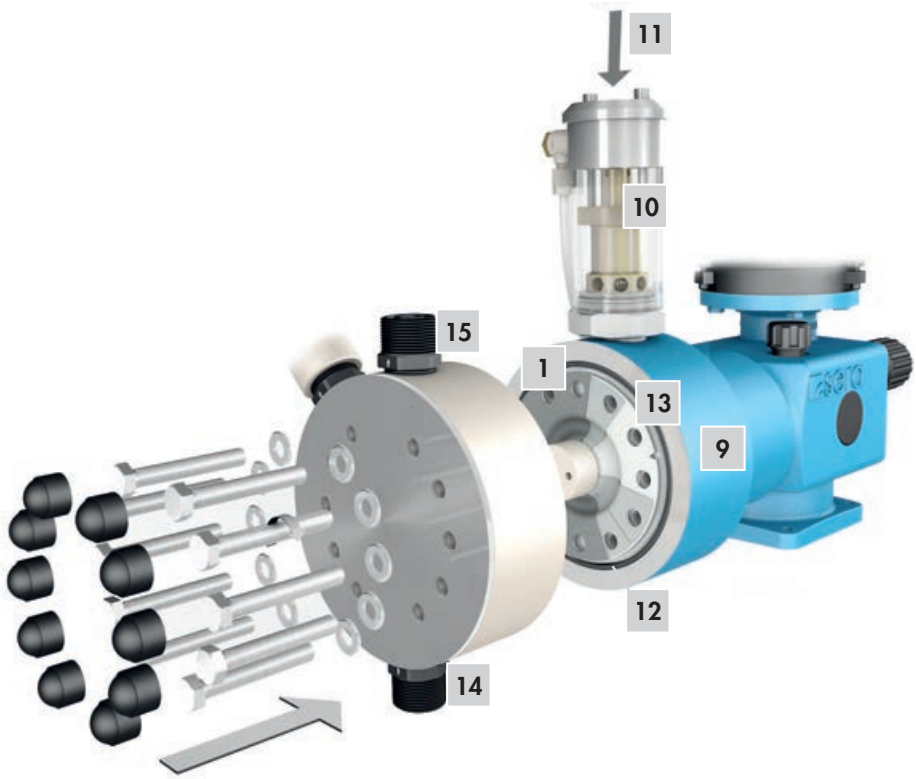

Pump type	Hydraulic fluid	Quantity (cm^3)
...409.2-7,5 KM - ...409.2-18 KM	ALAN FOOD 100	50
...409.2-45 KM - ...409.2-190 KM	ALAN FOOD 100	120
...410.2-38 KM - ...410.2-76 KM	ALAN FOOD 100	120
...410.2-150 KM - ...410.2-310 KM	ALAN FOOD 100	350
...410.2-510 KM - ...410.2-850 KM	ALAN FOOD 100	1300

- Set maximum stroke length.
- Fill hydraulic fluid in store tank and make sure not to overfill in first stage.
- Start pump and press on blow valve with a screwdriver at each stroke of the pump. Hydraulic fluid is sucked in.
- Fill remaining hydraulic fluid in store tank.
- Press again on the blow valve with a screwdriver and repeat process until no bigger air bubbles escape from
- the hydraulic chamber.
- Switch pump off again.
- Screw in vent valve.
- Reset stroke length to the initial value.
- Connect suction- and pressure line.
- The pump is then again ready for operation.

ATTENTION

Fill in new hydraulic fluid after every diaphragm change!

Before reactivating the pump after a diaphragm replacement, remove the air between the diaphragm layers:

Diaphragm monitoring by manometer or pressure switch:

- Screw out the signal device.
- Apply delivery pressure and have the pump run for a short period (30s).
- Switch off the pump.
- Screw in the signal device.

Diaphragm monitoring by pressure switch ex-design (R/M409.2 / R/M410.2):

- Release union nut (**3/7**) and remove the signal device (**2/6**).
- Apply delivery pressure and have the pump run for a short period (30s).
- Switch off the pump.
- Screw on the signal device (**2/6**):

Pressure switch is for pump body made of plastic (1):

- Adjust the pressure switch (**2**) to the desired position.
- Tighten union nut (**3**) by hand and hold the insert socket (**4**) by means of an open-end wrench.

Pressure switch is for pump body made of stainless steel (5):

- Screw the pressure switch (**6**) with union nut (**7**) on the external thread of the socket.
- Tighten the union nut (**7**) with an open-end wrench and while doing so, press against with an open-end wrench at the insert socket (**8**). Adjust the pressure switch (**6**) to the desired position.

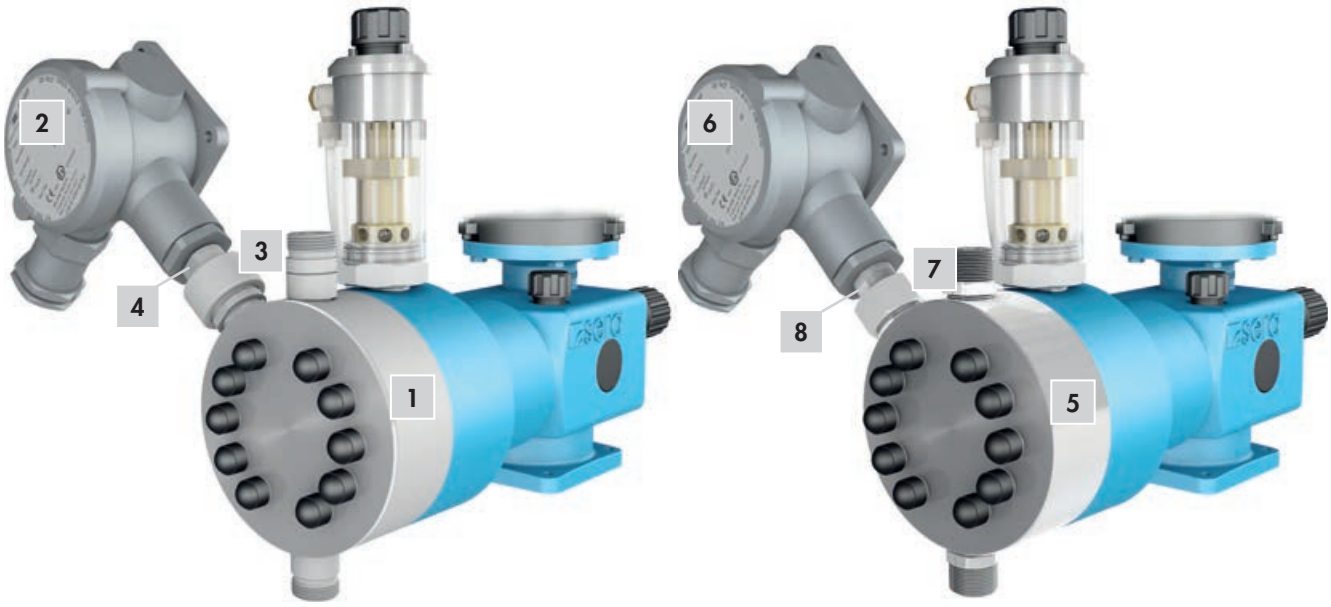

Add the suction and pressure line and connect the pump to the power supply. The pump is then again ready for operation.

Setting the hydraulic compensating valve

Blow valve and hydraulic discharge valve are factory-set to the values for suction height and counterpressure stated in the confirmation of order. If operating data on-site deviate from these values the hydraulic compensating valve is to be reset according to the actual operating conditions while adhering to the maximum permissible pressures.

Blow valve

Set the spring tension of the blow valve (**1**) with the rifle nut so that a stroke movement of appr. 0,5 to 1 mm is achieved at every suction stroke.

Proceed as follows when the pump is switched off:

- Put socket spanner (**2**) (SW10) on rifle nut (**3**) and hold in place.
- Put smaller socket spanner (**4**) (SW5,5) through bigger socket spanner (**2**), loosen lock nut (**5**)) and remove socket spanner (**4**).
- Secure cone (**7**) of blow valve (**1**) with a screwdriver (**6**) (slot 0,6mm) against distortion and turn rifle nut (**3**) using the socket spanner (**2**).
  Clockwise ► spring tension is increased, higher suction height
  Counterclockwise ► spring tension is reduced, lower suction height or supply
- Remove socket spanner and screwdriver and switch pump on (pump is operated within the system).
- Check correct stroke movement of the blow valve. If stroke movement is not correct, repeat setting and check stroke movement again.
- If the defined values are kept, switch pump off and tighten lock nut while holding the rifle nut in place.

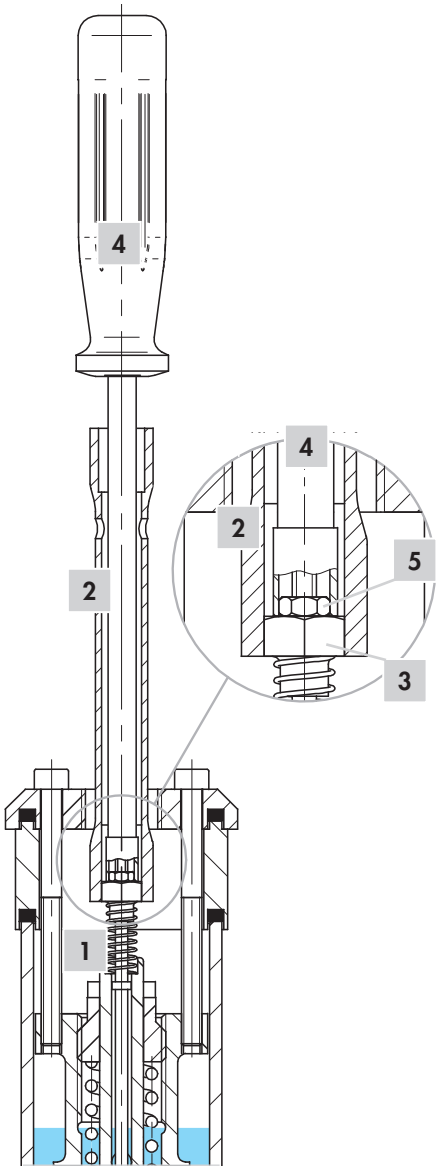

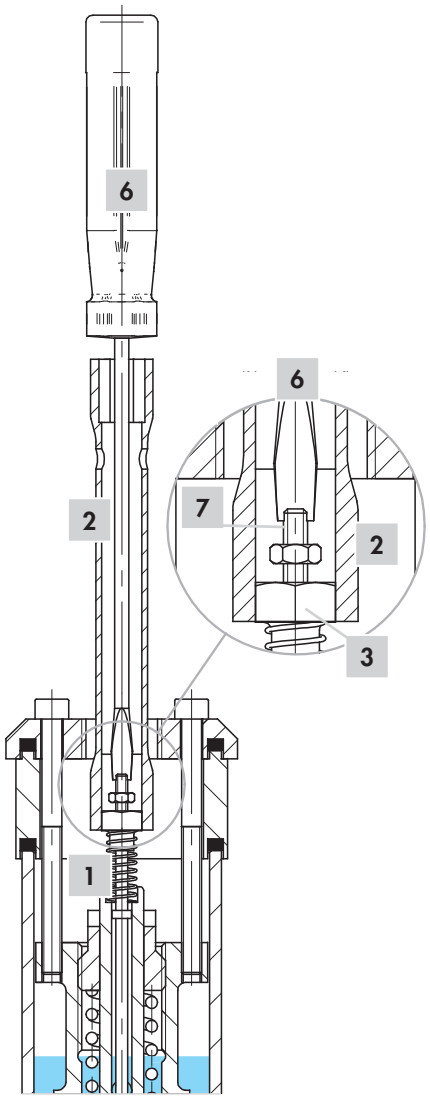

Hydraulic dischange valve

Set the pressure of the hydraulic dischange valve in such a way that it is appr. 10 – 15% higher than the maximum operating pressure of the system.

ATTENTION

The set pressure must not exceed the maximum permissible counterpressure of the pump. Control with manometer or other announcement necessary!

Proceed as follows when the pump is switched on:

Factory-set pressure too high:

- Turn slowly the adjusting screw (**2**) anti-clockwise by means of a adjusting spanner (**1**) with the pump running until the fluid level in the store tank (**3**) rises suddenly ► hydraulic discharge valve (**4**) opens.

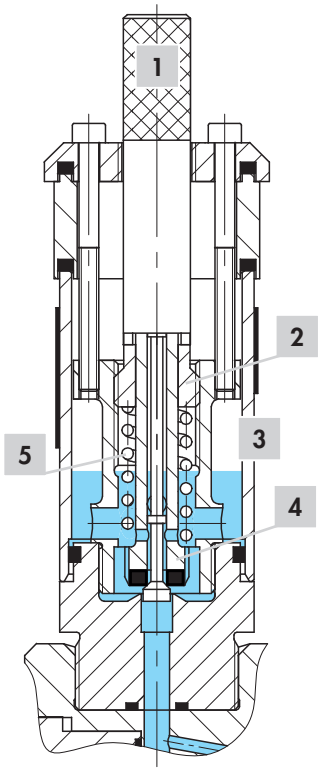

ATTENTION

The adjusting screw of the hydraulic relief valve must never be screwed in such a way that the pressure spring (5) is pressed together to solid length.

- Turn set screw slowly clockwise until the fluid level lowers again and reaches the level before opening.
- Turn the set screw a ½ turn further to the right. Hydraulic discharge valve is now set to the operating conditions.
- If a manometer is installed on the pump pressure side the set pressure can be checked via the manometer.

Factory-set pressure too low
(hydraulic fluid level rises in the store tank when the pump was switched on):

- Turn set screw slowly clockwise until the fluid level lowers again and reaches the level before the pump was switched on.
- Turn the set screw a ½ turn further to the right. Hydraulic discharge valve is now set to the operating conditions.
- If a manometer is installed on the pump pressure side the set pressure can be checked via the manometer.

ATTENTION

If an external discharge valve or a safety valve is installed on the pump pressure side the set pressure of the hydraulic discharge valve should be by 10% higher than the set pressure of the discharge / safety valve.

ATTENTION

The set pressure must not exceed the maximum counterpressure of the pump (see Chapter „Technical data“).

NOTE

High dosing precision and a long service life of the piston diaphragm pump are ensured if the hydraulic compensating valve (hydraulic discharge valve and blow valve) is set according to the operating conditions.

When recommissioning please proceed as follows:

- Check position of set screw (**2**) at hydraulic relief valve and release valve. Position of set screw as shown in Pos. **A**.
- Screw set screw in with adjusting spanner (**1**) clockwise until there is a slight resistance at the pressure spring.

After pump has primed again in unpressurized system set the hydraulic relief valve back to operating conditions. This can be done as follows:

- In case there is a manometer installed on the pump pressure side the set pressure can be set to the required operating pressure by slowly screwing in the set screw clockwise. Doing this the system must be pressurized.
- In case there is no manometer set the pressure under visual control. Turn set screw clockwise until the liquid level in the hydraulic compensating valve falls low and comes approximately to the level before switching on the pump. This will stop the strong ups and downs of the liquid level! Doing this the system must be pressurized.■

- Now turn set screw for another half turn. The hydraulic relief valve is set to operating conditions now.
- Please take care of safety instructions!

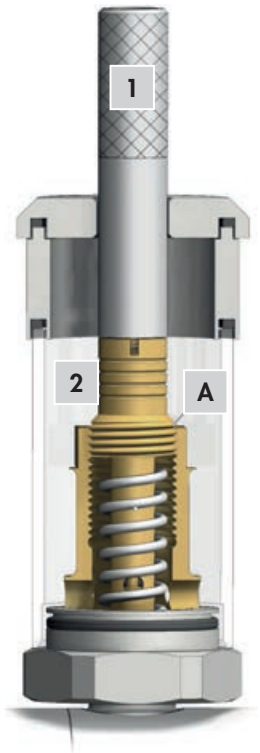

Spare and wearing parts

The following parts are considered as wearing parts of the pump:

- Multi-layer diaphragm
- Diaphragm monitoring, complete
- Valve kit (including O-ring kit)
- O-ring kit
- Hydraulic compensating valve kit
- Sealings kit
- Return pipe kit
- Plexiglass cylinder kit
- Cylinder kit
- Cylinder bushing kit
- Piston kit

Depending on their use and period of use, wearing parts must be replaced at regular intervals in order to ensure a safe function of the diaphragm pump.

We recommend to replace the wearing parts after 3000 operating hours or at least once a year.

In case of a premature diaphragm rupture caused by hard operating conditions, switch off the diaphragm pump and replace the diaphragms (see chapter „Changing the diaphragm“).

The following parts are considered as spare parts of the pump:

- Pump body kit (including mounting kit)
- Mounting kit

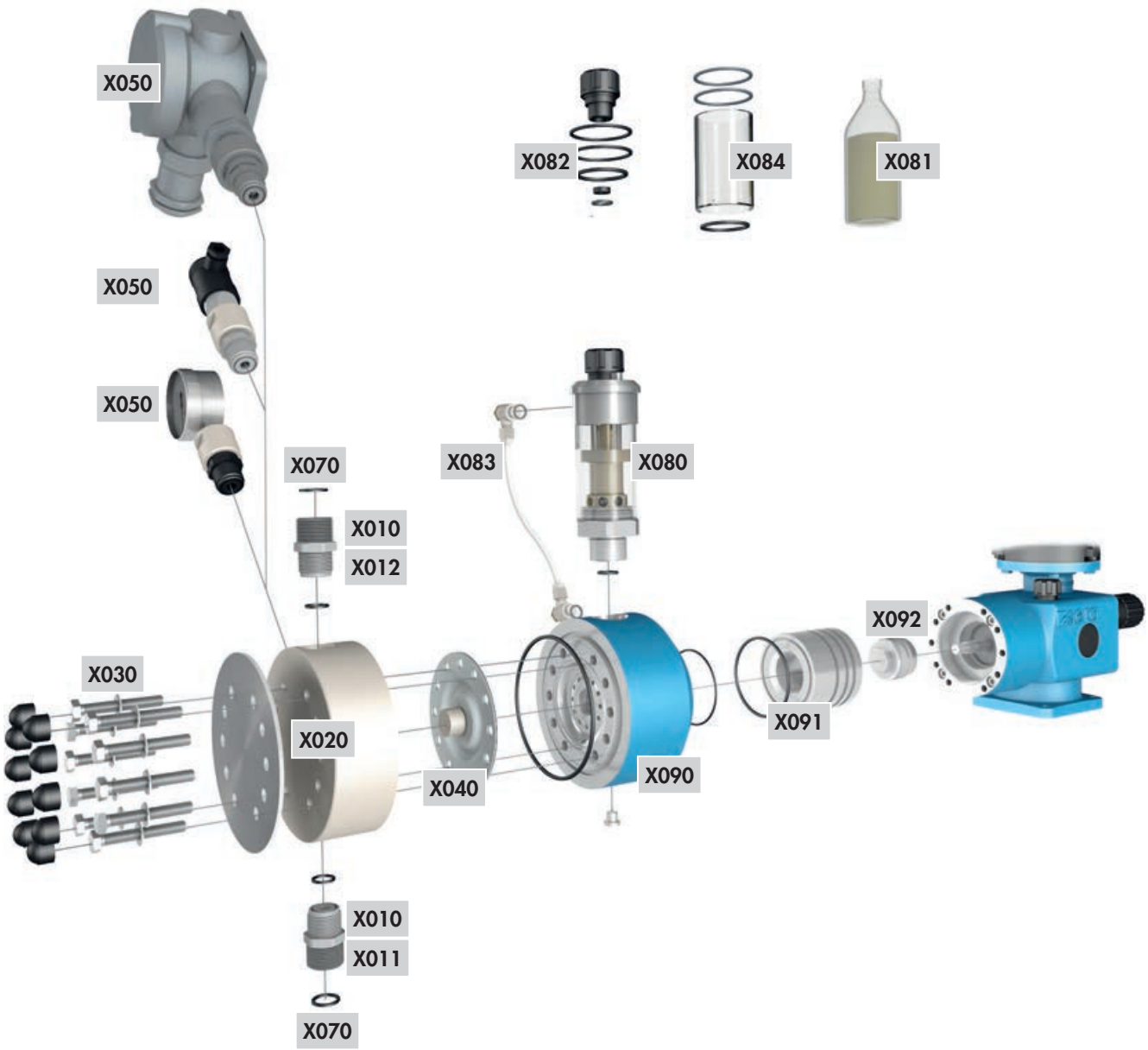
X050
X082
X084
X081
X050
X050
X070
X083
X080
X010
X012
X092
X030
X020
X091
X040
X090
X010
X011
X070

Pos.	Kit	Materials	consisting of
X010	Valves	PVC-U; PP-FRP; PVDF-FRP	Suction valve Pressure valve O-ring kit
X011	Suction valve	1.4571	Suction valve O-ring kit
X012	Pressure valve	1.4571	Pressure valve O-ring kit
X020	Pump body	PVC-U, PP, PVDF	Pump body Front plate Mounting kit
X020	Pump body	1.4571	Pump body Mounting kit
X030	Mounting		Screws, complete
X040	Multi-layer diaphragm		Pressure plates Working diaphragm Signal diaphragm Protection diaphragm Set screw
X050	Diaphragm monitoring by manometer (RF-, MF-design)		Diaphragm monitoring complete
X050	Diaphragm monitoring by pressure switch		Diaphragm monitoring complete
X050	Diaphragm monitoring by pressure switch Ex (R-, M-design)		Diaphragm monitoring complete
X070	O-rings		
X080	Hydraulic compensating valve		Hydraulic compensating valve, complete Set sealings Set plexiglass cylinder
X081	Hydraulic oil		
X082	Sealings		Sealing O-rings Vent screw
X083	Return pipe		Return pipe, complete
X084	Plexiglass cylinder		Plexiglass cylinder O-rings
X090	Cylinder		Cylinder Screw plug O-rings
X091	Cylinder bushing		Cylinder bushing O-ring
X092	Piston		Piston Guide ring Sealing

FAULT ANALYSIS / CORRECTIVE ACTION

sera products are sophisticated technical products which are only shipped after having been thoroughly tested and checked at our factory.
Should there be any faults, these can be detected and rectified easily and quickly based the instructions in the tables.

NOTE

Analysis of the error messages in the display for the pumps with a control ► see the operation instructions of the control!

Fault type															Possible cause	Corrective action
Corrective action!	Display, LED not lit! ▲ Pump with control	Motor does not start! ▲ diaphragm pump	Damage to stroke mechanism / drive!	Pump does not draw in!	Pump does not deliver!	Flow rate is not reached!	Delivery head is not reached!	Flow rate fluctuates!	Maximum permissible flow rate exceeded!	Pipe oscillates heavily!	Too high noise development!	Service life of the drive diaphragm too low!	Drive is overloaded (periodically occurring noises)!	Leakage on pump head!		
				■	■	■									Suction height too high.	Reduce suction height or suction resistance.
				■	■	■		■							Suction pipe leaking.	Check seals, tighten pipe connections.
				■	■							■	■	■	Shut-off valves in piping closed.	Open shut-off valves or check opening state ► check pump for possible damage.
				■	■	■									No pumped medium in storage tank.	Fill storage tank.
				■	■	■	■	■							Pump valves leaking.	Remove and clean valves.
				■	■		■	■							Pump valves (ball seats) damaged.	Remove and clean valves, check function; replace valves if necessary.
				■	■										Pump valves incorrectly mounted or valve balls missing.	Check installation position and completeness ► replace missing parts or install correctly.
				■	■	■		■							Filter in suction line clogged.	Clean filter.
				■	■	■	■	■					■		Electrical data of the pump do not match mains data.	Check order data. Check electrical installation. Adjust motor to the network on site (for diaphragm pumps).
					■	■	■	■		■		■	■	■	Backpressure too high.	Measure pressure with manometer directly above pressure valve if possible and compare with permissible backpressure.
				■	■	■	■	■							Foreign matter in the pump valves.	Remove and clean valves.
								■	■						Pressure on suction side higher than at the end of the pressure pipe.	Check geodetic conditions, install float valve or pressure keeping valve if necessary.
						■	■	■		■	■	■	■	■	Acceleration height too high due to pipe geometry.	Check acceleration height on suction and pressure sides with manometer and compare with design data ► install a pulsation damper if necessary.
												■		■	Materials coming into contact with the medium not suitable for the pumped medium.	Check whether the pumped medium matches the design data and select other materials if necessary.

Fault type															Possible cause	Corrective action
Corrective action!	Display, LED not lit! ► Pump with control	Motor does not start! ► diaphragm pump	Damage to stroke mechanism / drive!	Pump does not draw in!	Pump does not deliver!	Flow rate is not reached!	Delivery head is not reached!	Flow rate fluctuates!	Maximum permissible flow rate exceeded!	Pipe oscillates heavily!	Too high noise development!	Service life of the drive diaphragm too low!	Drive is overloaded (periodically occurring noises)!	Leakage on pump head!		
				■		■	■	■							Viscosity of the pumped medium too high.	Check viscosity of the pumped medium and compare with design data ► reduce concentration or increase temperature if necessary.
					■	■		■							Pumped medium is outgassing in the suction pipe and/or the pump body.	Check geodetic conditions and compare with data of the pumped medium. Operate pump with suction side supply, reduce temperature of the pumped medium.
				■											Air in suction line while pressure is present on the pressure side.	Vent pressure side.
	■														Power supply failed / switched off.	Restore power supply.
				■	■	■	■	■							Pipe connections leaking.	Tighten connections according to type of material. Be careful with plastic ► risk of fracture!!
				■	■										Pumped medium frozen in pipe.	PRemove pump and check for possible damage - increase temperature of the pumped medium.
■	■				■										No mains power connection.	Connect mains power supply.
				■											Pump valves dry.	Moisten pump body and valves. Open vent valve.
				■	■	■								■	Temperature too low.	Check flowability of the dosing medium. Temperature of the medium see „Technical data“.
				■	■	■	■	■				■		■	Diaphragm rupture.	Replace the diaphragm according to the descriptions in Chapter „Replacing the diaphragm“.
■															Reversible thermal fuse of the pump has tripped.	Let temperature of the pump cool down. Check ambient temperature.
	■														Fuse in electronics blown. ► Pump with control	Return pump for repair.
				■	■	■	■								Compensating valve not adjusted to operating conditions. ► diaphragm pump KM	Set compensating valve according to operating conditions. ► diaphragm pump KM

WARNING

Observe and follow the safety instructions by all means.
See the additional instructions „SAFETY INSTRUCTIONS".
Man, machine and environment are endangered if the safety instructions are not observed.

Shut-down

- Switch off piston diaphragm pump.
- Rinse pump head and remove pumped medium; make sure that the rinsing agent is suitable for pumped medium and pump head.

Disposal

- Shut-down system. Please see "Shut-down".

Dismantling and transport

- Shut-down system. Please see "Shut-down".
- Remove all fluid residues from pump body, clean thoroughly, neutralize and decontaminate.
- Package unit and ship.

NOTE

A clearance certificate must be filled in when systems are returned to the manufacturer.
Acceptance will be rejected if this clearance certificate is not attached.

Complete disposal

- Remove all fluid residues from unit.
- Drain off lubricants and dispose of according to regulations!
- Dismount materials and send them to a suitable waste disposal company!

CLEARANCE CERTIFICATE

NOTE

Inspection / repair of machines and machine parts is only carried out after the opposite clearance certificate was filled in correctly and completely by authorized and qualified personnel.

NOTE

Acceptance will be refused if parts are returned to the manufacturer without a proper clearance certificate.

All industrial companies are obligated by the legal provisions for occupational health, e.g. the workplaces ordinances, the Ordinance on Hazardous Substances, the regulations for prevention of accidents and the environmental protection regulations such as the Waste Management Act and the German Household Water Act to protect their employees or man and the environment from detrimental effects when handling hazardous substances.

Should special safety precautions be necessary despite careful draining and cleaning of the product the necessary information are to be provided.

Machines which are operated with radioactive media shall only be inspected and/or repaired in the safety area of the owner by a **sera** specialized fitter.

The clearance certificate is part of the inspection-/repair order.
sera reserves the right to refuse acceptance of the order for other reasons.

NOTE

Please make a copy and leave the original with the operating instructions!
(can also be downloaded from: www.sera-web.com)

Clearance Certificate

Product

Type _____ Serial-No. _____

the product was carefully emptied before shipping / delivery, and cleaned inside and outside. ☐ **YES**

Conveying medium

Designation _____ Concentration _____ %

Properties

Please tick!

If either of the listed properties, then enclose the appropriate safety and handling instructions.

☐ Harmless

☐ Toxic ☐ Corrosive ☐ Flammable ☐ Oxidising ☐ Unhealthy

☐ Explosive ☐ Dangerous for the environment ☐ Irritant ☐ Bio-hazardous ☐ Radioactive

The product was used with health or water-polluting substances and came up with labeling requirements and pollution prone media in contact. ☐ **YES** ☐ **NO**

Special security arrangements with respect to health or water-hazardous media are in the further handling ☐ **not required** ☐ **required**

The following safety precautions regarding rinsing, residual liquids and waste disposal are required:

Process data

The product was used with the following operating conditions described conveying medium:

Temperature _____ °C Pressure _____ bar

Sender

Company: _____ Telephone: _____

Contact person: _____ FAX: _____

Address: _____ E-mail: _____

Zip code, City: _____ Your order No: _____

We confirm that we have the information in this safety certificate (Clearance Certificate) have been correctly and completely and that the returned parts were carefully cleaned.

The parts are sent free of residues of dangerous amount.

Place, Date _____ Department _____ Signature (and company stamp) _____

QSF 469-01 en / 11.2014 / PM

FOLLOW US

sera GmbH
sera-Str. 1
34376 Immenhausen
Germany
Tel. +49 5673 999 00
Fax +49 5673 999 01
info@sera-web.com
www.sera-web.com

TM03-03 EN 10/2020. **sera**® is a registered trademark of **sera** GmbH.
Technical details subject to change. **sera** shall not accept any liability for errors or omissions or for printing errors.